CITY OF NEW BRAUNFELS, TEXAS
HISTORIC LANDMARK COMMISSION MEETING
ZOOM MEETING
550 LANDA STREET

TUESDAY, FEBRUARY 9, 2021 at 8:30 AM

TO PROTECT THE HEALTH OF THE PUBLIC AND LIMIT THE POTENTIAL SPREAD OF COVID-19, NO IN-PERSON PUBLIC ACCESS TO THIS MEETING IS AVAILABLE. READ BELOW FOR WAYS TO PARTICIPATE IN THIS MEETING.

To participate via Zoom, use the following link: **https://us02web.zoom.us/j/87422935572** or call (833) 926-2300 and enter webinar ID# 874 2293 5572

AGENDA

1. CALL TO ORDER

2. ROLL CALL

3. APPROVAL OF MINUTES

Approval of the January 12, 2020 regular meeting minutes. 21-163

4. CITIZENS' COMMUNICATIONS

This time is for citizens to address the Historic Landmark Commission on issues and items of concerns not on this agenda. There will be no Historic Landmark Commission action at this time.

5. INDIVIDUAL ITEMS FOR CONSIDERATION

HST21-035 Discuss and consider a Certificate of Alteration to attach a sign to the commercial building addressed at 223 West San Antonio Street, located within the Downtown Historic District. 21-158

Caleb Gasparek, Historic Preservation Officer

HST21-001 Discuss and consider a Certificate of Alteration to demolish a single-family dwelling addressed at 456 Magazine Avenue, located within the Sophienburg Hill Historic District. 21-159

Caleb Gasparek, Historic Preservation Officer

HST21-048 Discuss and consider a Certificate of Alteration to attach a sign to the commercial building addressed as 1255 Gruene Road, a landmarked structure known as the Ottmar Gruene House. 21-160
Caleb Gasparek, Historic Preservation Officer

HST21-050 Discuss and consider a Certificate of Alteration to construct a 2-story addition to the dwelling at 307 North Guenther Avenue, a local landmark known as the Ikel's House. 21-165
Caleb Gasparek, Historic Preservation Officer

6. STAFF REPORT

Discuss the following items requested by the Historic Landmark Commission at the January 12, 2021 meeting: 21-164

- Renaming of Braddock Ave to Boenig-Maurer
- Property maintenance for Historic structures
- The creation of a design review subcommittee

Caleb Gasparek, Historic Preservation Officer

7. ADJOURNMENT

CERTIFICATION

I hereby certify the above Notice of Meeting was posted on the bulletin board at the New Braunfels City Hall on February 5, 2021 at 3:00p.m.

_____

Caleb Gasparek, Historic Preservation Officer

NOTE: Persons with disabilities who plan to attend this meeting and who may need auxiliary aids or services such as interpreters for persons who are deaf or hearing impaired, readers, or large print, are requested to contact the City Secretary's Office at 221-4010 at least two (2) work days prior to the meeting so that appropriate arrangements can be made.

Historic Landmark Commission Agenda Item Report

550 Landa Street
New Braunfels, TX

2/9/2021

Agenda Item No.

Historic Landmark Commission
Regular Meeting Minutes
January 12, 2021

Members Present
Chair Yvonne Hoffmann
Vice Chair Bonnie Leitch
Nathan Feingold
Katie Totman
Melinda Poss
Thomas Tumlinson
Susan Sonier
Teresa Johnson

Staff Present
Caleb Gasparek, Historic Preservation Officer
Sam Hunter, Planning Technician
Chris Looney, Planning & Development Services Director
Nathan Brown, Assistant City Attorney

Members Absent
Joel Rector

1. The above meeting was called to order by Chair Hoffmann at 8:30 a.m.

2. ROLL CALL
Roll was called, and a quorum was declared.

3. APPROVAL OF MINUTES
Chair Hoffmann approved the November 10, 2020 meeting minutes with revisions.

4. CITIZENS COMMUNICATION
None.

5. ITEMS FOR CONSIDERATION
A) HST20-302 Public hearing and recommendation to City Council for the landmark designation of the property currently addressed as 210 S. Castell Ave, a commercial space commonly known as the Producer's Co-Op building. *Caleb Gasparek, Historic Preservation Officer*

Mr. Gasparek presented and stated the building meets several criteria for designation.

Chair Hoffmann asked if the applicant would like to speak.

No one spoke.

Chair Hoffmann asked if the Commission had any questions or a motion.

Motion by Chair Hoffmann, seconded by Vice Chair Leitch, to recommend approval to Planning Commission and City Council for the landmark designation of the property currently addressed as 210 S. Castell Ave, a commercial space commonly known as the Producer's Co-Op building.

Discussion followed.

Motion carried (8-0-0).

B) HST21-001 Discuss and consider a Certificate of Alteration to demolish a single-family dwelling located at 456 Magazine Avenue, located within the Sophienburg Hill Historic District. *Caleb Gasparek, Historic Preservation Officer*

Mr. Gasparek presented and stated that a historic aged accessory structure and driveway had been

demolished without a permit.

Discussion followed on tree removal and potential new design of the lot.

Christian Laijas, P.O. Box 310394, Architect, stated the intent behind the request.

Discussion followed on the design of the potential house not fitting within the character of the Historic District.

Chair Hoffmann asked if the applicant would like to speak.

Mr. Laijas stated the issues with the home renovations that would need to be made to maintain the original character of the home.

Discussion followed on concerns for the demolition being approved and the proposed home.

Chair Hoffmann asked if the Commission had any questions or a motion.

Motion by Vice Chair Leitch, seconded by Commissioner Poss, to deny a Certificate of Alteration to demolish a single-family dwelling located at 456 Magazine Avenue within the Sophienburg Hill Historic District.

Discussion followed.

Motion carried (8-0-0).

6. STAFF REPORT

Vice Chair Leitch suggested changing the name of Braddock Ave to Boenig-Maurer to respect the historic district.

Commission Tumlinson asked on the status of the Historic District Tree Ordinance.

Mr. Gasparek updated the Commission that public notice needs to be sent out and that the Planning Commission had been briefed at the January 5, 2021 meeting.

Discussion followed on next steps for HST21-001, 456 Magazine Ave.

Commissioner Feingold asked if there was anything the Commission could do about dilapidated homes in the Historic Districts.

Discussion followed.

ADJOURNMENT

There being no further business, Chair Hoffman adjourned the meeting at 9:03 a.m.

_____ _____

Chair **Date**

Historic Landmark Commission Agenda Item Report

2/9/2021

Agenda Item No.

Presenter/Contact
Caleb Gasparek, Historic Preservation Officer
(830) 221-4086 - Cgasparek@nbtexas.org

Subject:
HST21-035 Discuss and consider a Certificate of Alteration to attach a sign to the commercial building addressed at 223 West San Antonio Street, located within the Downtown Historic District.

Background:

Case #:	HST21-035
Owner:	Scores Sports Bar
Applicant:	Tim Babb / Sign Crafters 2401 S IH 35 San Marcos, TX 78666

The subject property is situated on the east side of West San Antonio Street between Castell and Hill Avenues in the Downtown Historic District. The subject structure is a single-story commercial building sharing party walls with two other commercial buildings.

Historic Context:
Historic maps indicate that the structure was built around 1925 as an addition to the two-story building adjacent to the property. The building was originally an extension of the Pfeuffer and Holm Store. The J.C. Penney store operated at this location, holding a lease agreement on the property through the early 1980's.

The primary façade is a recessed storefront entry with glass windows. The applicant has indicated that the façade canopy is constructed of fiber cement material (Hardie board).

Request:
The applicant is requesting a Certificate of Alteration to erect an attached, protruding wall sign in place of the existing sign. The proposed sign is oval shaped and reads "Scores Sports Bar & Grill." The attached sign measures 60 inches by 38 & 5/8 inches, and is attached by steel bolts mounted on the Hardie-board.

Staff Analysis:
The proposed sign is to be attached to a non-historic storefront located above the canopy. The sign's orientation perpendicular to the sidewalk should produce a more unified and cohesive aesthetic for commercial properties in the Downtown Historic District. Similar signs can be found Downtown both along San Antonio and Seguin Streets.

Attachments:

1. Location Map
2. Application
3. Sanborn Map
4. Sign Renderings

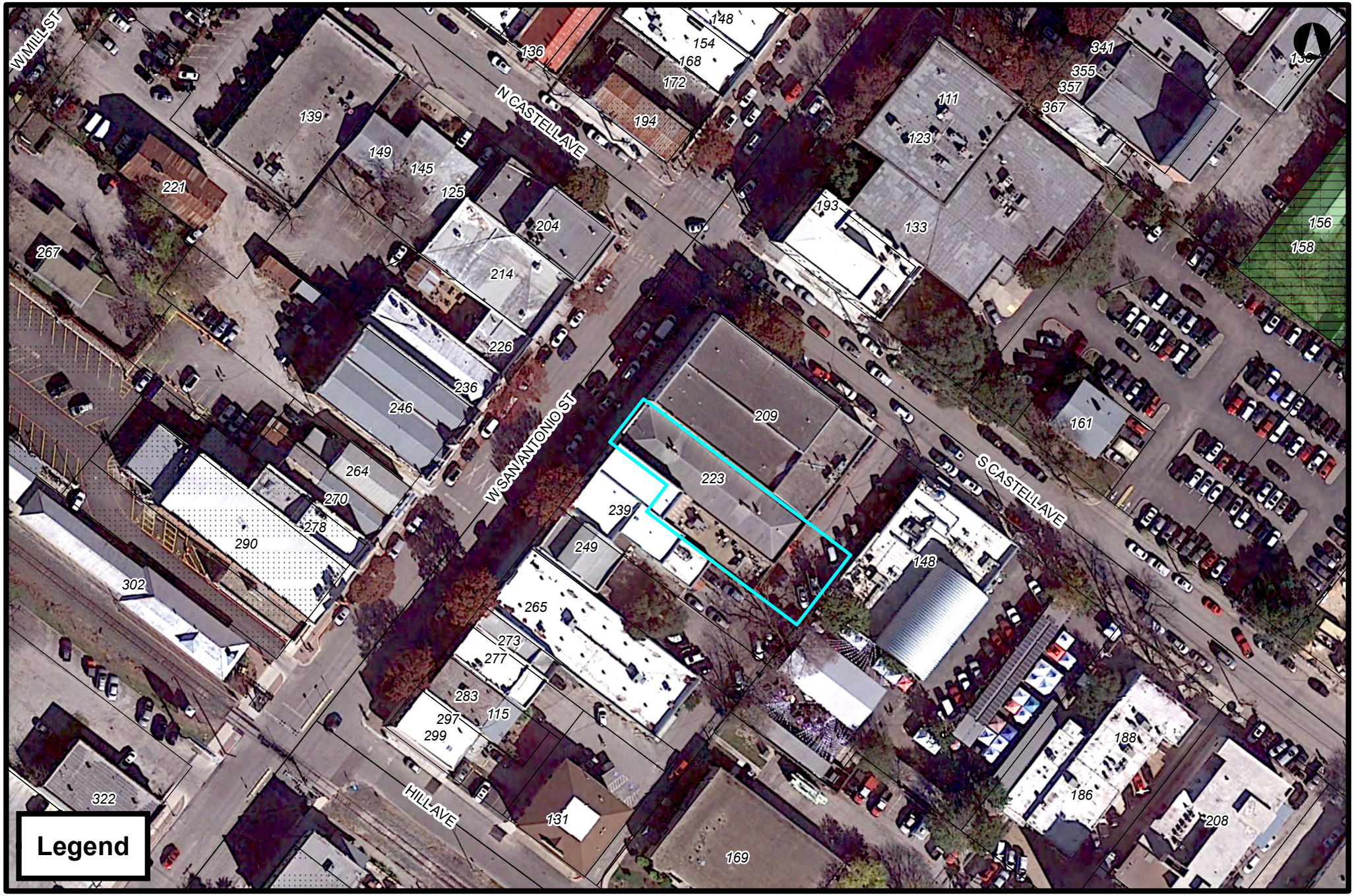

223 W. San Antonio St.

Map Created: 2/3/2021

City of New Braunfels
PLANNING & DEVELOPMENT SERVICES

Planning & Development Services
Historic Preservation
550 Landa Street
New Braunfels, Texas 78130
(830) 221-4086 www.nbtexas.org

Case No: _____
Meeting Date: _____
☐ Historic District
☐ Historic Landmark
Submittal date – office use only

APPLICATION FOR A CERTIFICATE OF ALTERATION FOR A CITY LANDMARK OR LOCAL HISTORIC DISTRICT

NO FEE

Submit this Certification of Alteration application for review prior to submitting for any required building permit applications. Any variances, special exceptions or special approvals must be approved prior to submitting this application and any approvals shall be included in the application. A Certificate of Alteration does not substitute for or supersede any other permit reviews.

The Historic Preservation Officer (HPO) may approve certain minor projects without a review by the Historic Landmark Commission. Minor projects include routine maintenance and repair and limited minor alterations. Contact Caleb Gasparek (830-221-4086 or CGasparek@nbtexas.org) if you have questions about whether or not your project qualifies for administrative approval.

1. **APPLICANT INFORMATION:**

Name: Tim Babb
Mailing Address: 2401 S IH 35
City/State/ZIP: San Marcos, TX 78666
Telephone: 512-392-0900 ***Email:*** Tim@signcrafters.net

2. **PROPERTY OWNER (IF NOT APPLICANT*):**

****Letter of Authorization is required if the applicant is not the property owner.***

Name: Scores Sports Bar
Mailing Address: ~~[illegible]~~ 223 W San Antonio
City/State/ZIP: New Braunfels
Telephone: 512-925-1915 ***Email:*** scores.nb@gmail.com

3. **ARCHITECT OR CONTRACTOR:**

Name: Tim Babb
Company Name: Sign Crafters
Mailing Address: 2401 S IH 35
City/State/ZIP: San Marcos, TX 78666
Telephone: 512-392-0900 ***Email:*** Tim@signcrafters.net

4. **SUBJECT PROPERTY:**

Property Address/Location: 223 W San Antonio St.

Legal Description:

Name of Subdivision: N/A

Lot(s): _____ ***Block(s):*** _____ ***Acreage:*** _____

Existing Use of Property: _____

5. **SCOPE OF WORK (ATTACH ADDITIONAL PAGES IF NECESSARY):** _____

The Historic Landmark Commission (HLC) reviews proposed exterior and site changes to City Historic Landmarks and properties in Local Historic Districts to assist owners in retaining the character-defining architectural features of important historic sites and districts. An approved Certificate of Alteration from the HLC is required in advance of performing all non-routine exterior and site work, including installation of signage. Your building permit will not be released without an approved Certificate of Alteration review by the City Historic Preservation Officer (HPO) or the HLC.

A Certificate of Alteration is required for all non-routine exterior work, including:

- Alterations to historic materials;
- Alterations to the visual appearance of a site;
- Alterations to building façade;
- Additions to existing buildings;
- Re-cladding;
- Window replacement;
- Construction of new buildings;
- Changes in roof color or materials;
- Major landscape work (including pools);
- Changes in sidewalks; and,
- Changes in driveways.
- Demolition of buildings within historic districts

Historic Landmark Commission review is usually not required for ordinary maintenance work such as re-painting and performing routine repairs using like materials. Please check with the City HPO if you are uncertain whether an HLC review is required.

SUBMITTAL CHECKLIST:

STAFF:	APPLICANT:	
☐	☑	**Completed application**
		Please note: Any application that is missing information will be considered incomplete and cannot be accepted.
☐	☑	**Dimensioned and scaled building plans**
		Please note: For review purposes electronic submittal of plans in PDF format is preferred. If hard copies are submitted original plans should be no larger than 11" x 17" and be of a good, reproducible quality. Inaccurate or non-legible site plans can result in a delay with the application review.
		Must include the following documents:
		☐ Site plan (one for existing and one for proposed conditions. Must indicate all proposed site changes, such as additions, alterations, new construction or demolition)
		☐ Elevation plans (must specify all exterior changes and exterior building materials and finishes to be used, i.e., siding, roofing, windows, doors, fences, etc.)
		☐ Floor plans
		☐ Roof plan (Optional)
☐	☐	**Material samples, specifications or manufacturer information (Optional)**
☐	☑	**Color photographs of the structure and site (Staff may require a site visit prior to meeting)**

The signature of owner authorizes City of New Braunfels staff to visit and inspect the property for which this application is being submitted. The signature also indicates that the applicant or their agent has reviewed the requirements of this application/checklist and all items on this checklist have been addressed and complied with.

Property Owner's Signature: Hayton L. Eudy ***Date:*** 1/26/21

Applicant Signature: [signature] ***Date:*** 1/26/21

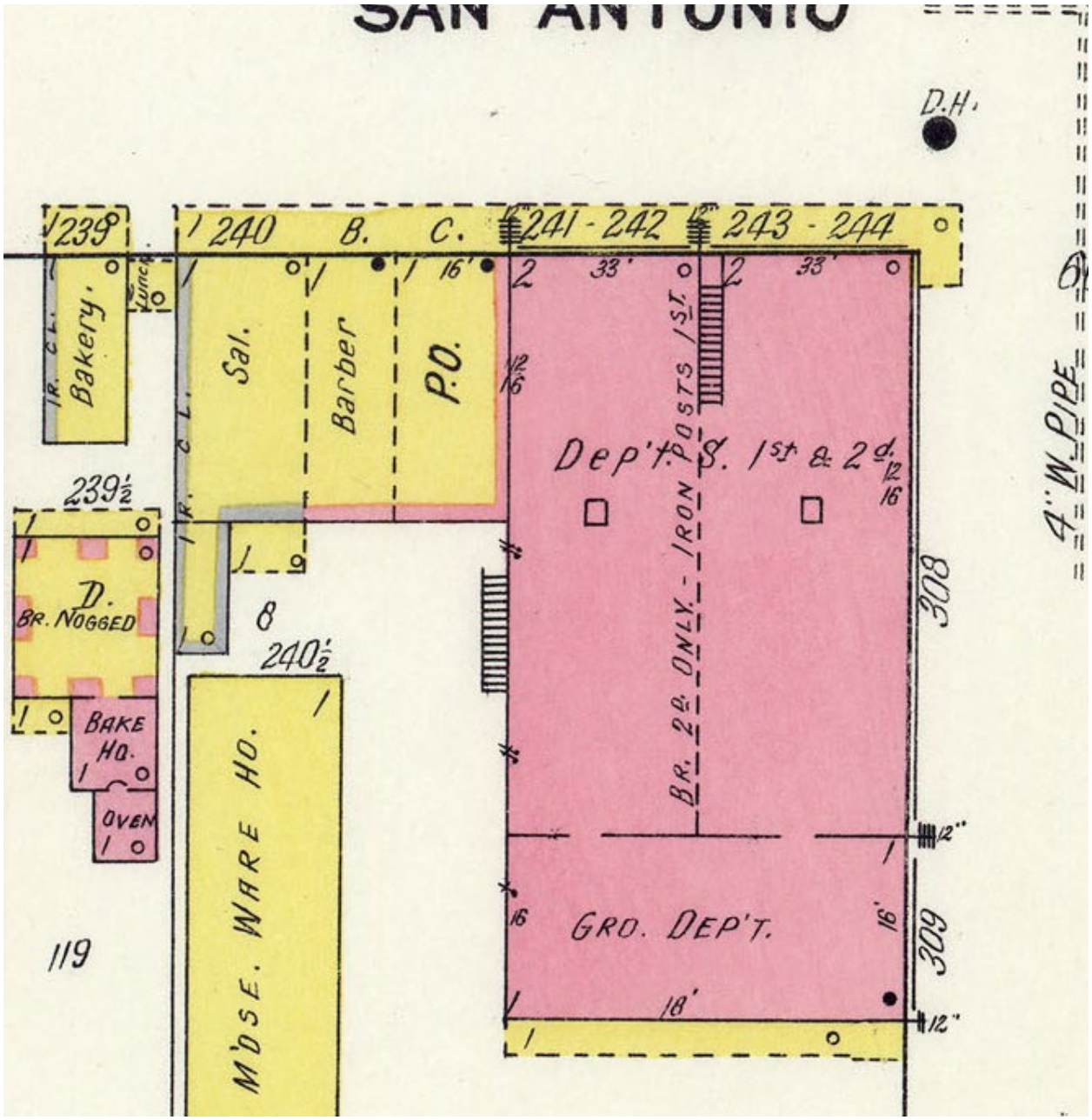
SAN ANTONIO
D.H.
239
240
B.
C.
241 - 242
243 - 244
Bakery
Sal.
Barber
P.O.
Dep't. S. 1st & 2d.
BR. 2d. ONLY. - IRON POSTS 1st.
4" W. PIPE
239½
D.
BR. NOGGED
8
240½
BAKE HO.
OVEN
M'DSE. WARE HO.
308
309
GRO. DEP'T.
119

1912

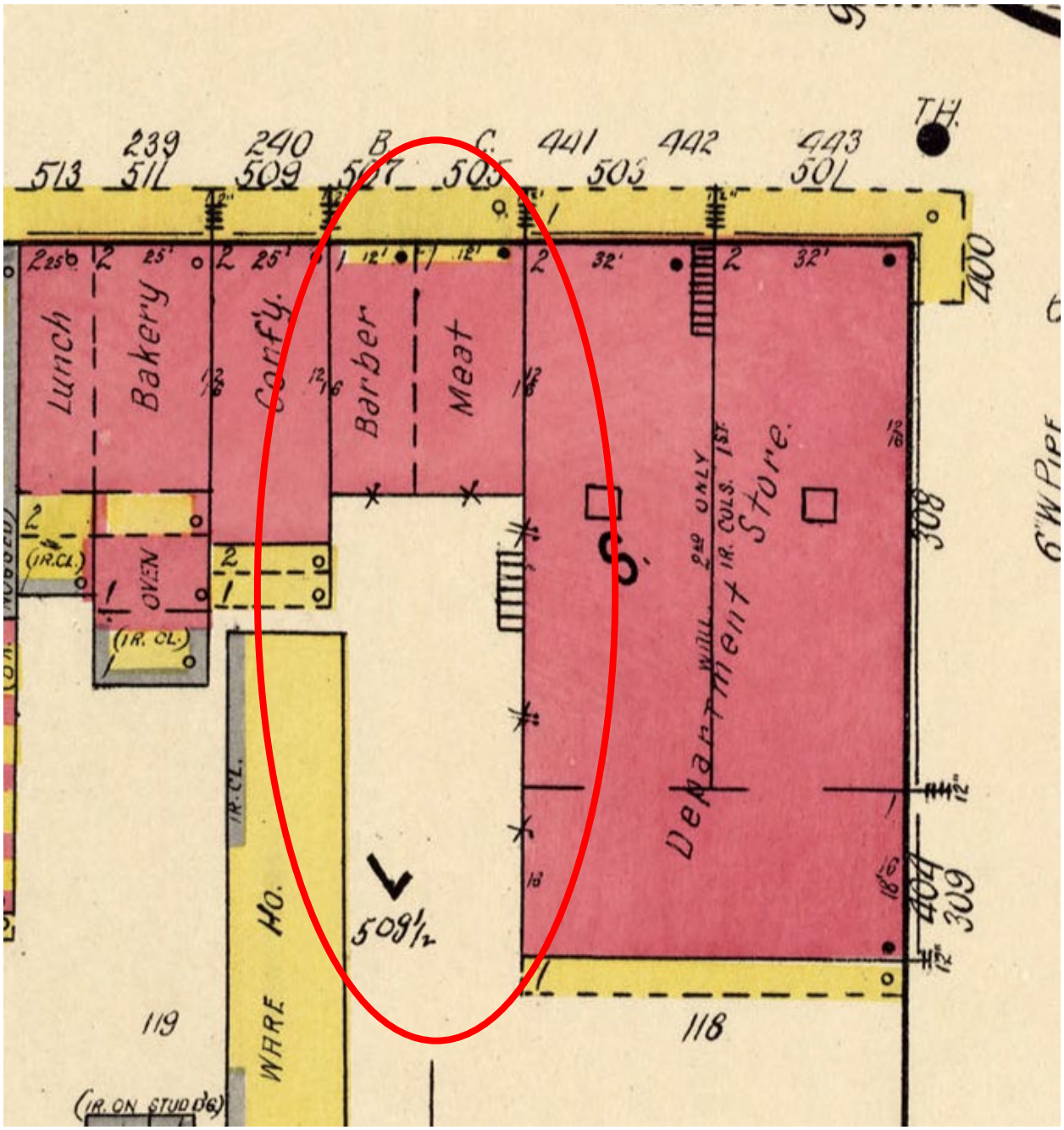

T.H.
239
240
B
C.
441
442
443
513
511
509
507
505
503
501
400
Lunch
Bakery
Conf'y.
Barber
Meat
Department Store
WALL 2ND ONLY
IR. COLS. 1ST.
308
6" W PIPE
OVEN
(IR. CL.)
IR. CL.
WARE HO.
509½
404
309
119
118
(IR. ON STUDDS)

1922

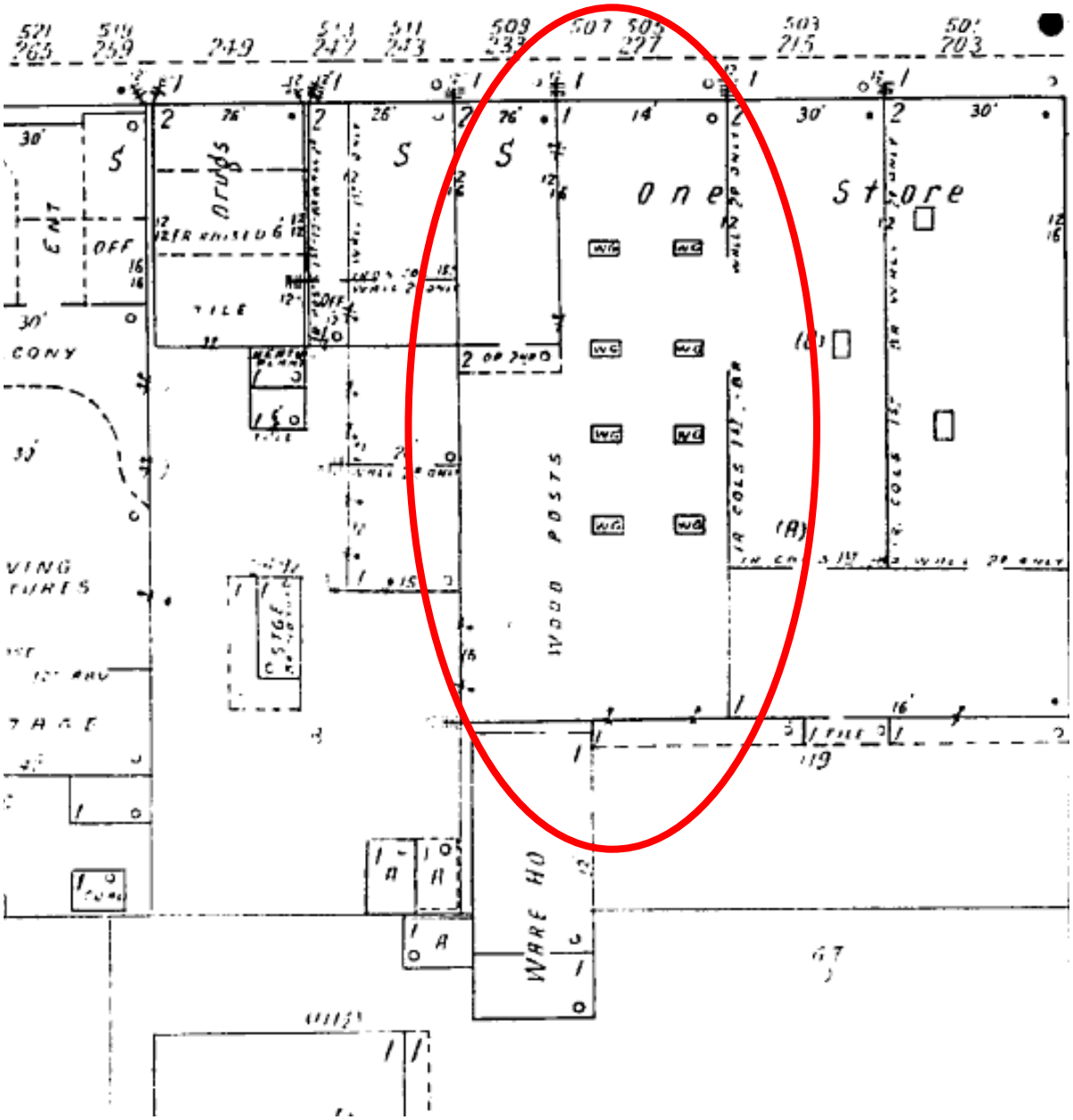

1930

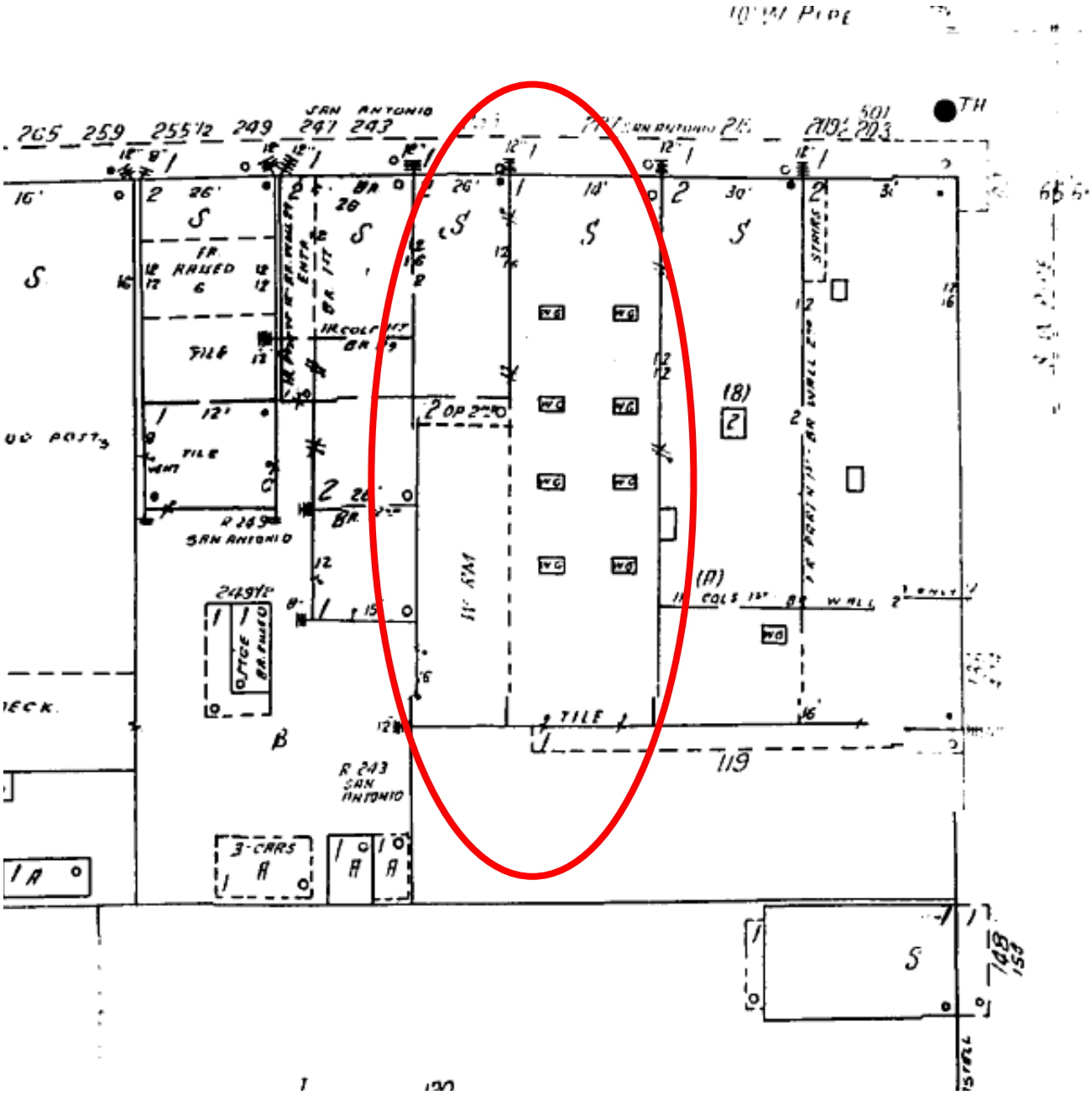
SAN ANTONIO
265
259
255½
249
247
243
TH
FR. RAISED
TILE
R 249 SAN ANTONIO
R 243 SAN ANTONIO
3-CARS
119
148
153

1945

39’
18’3“
Scores
Sports Bar
& Grill
NEW BRAUNFELS
TEXAS
Sports
Bar
& Grill
MIXED MEDIA
EXISTING SIGN TO BE REMOVED

BUILDING SIGN

FLAG MOUNTED
DOUBLED FACED
LED ILLUMINATED ACRYLIC FACES
PRINTED GRAPHICS
2.5“ SQ TUBE ALUMINUM FRAME
4“X48“X.25 MOUNTING PLATE

THROUGH BOLTED INSTALLATION

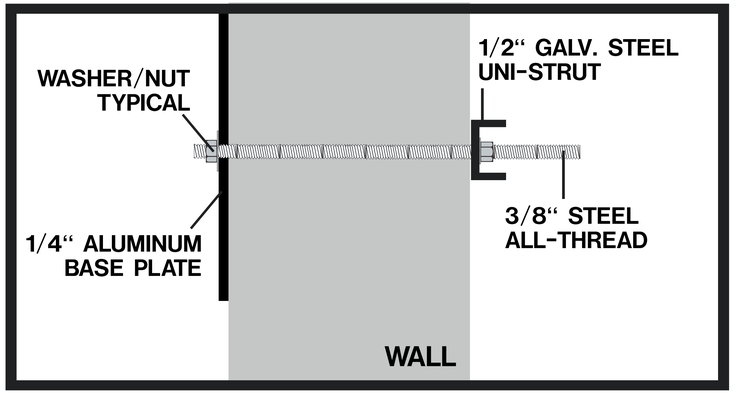

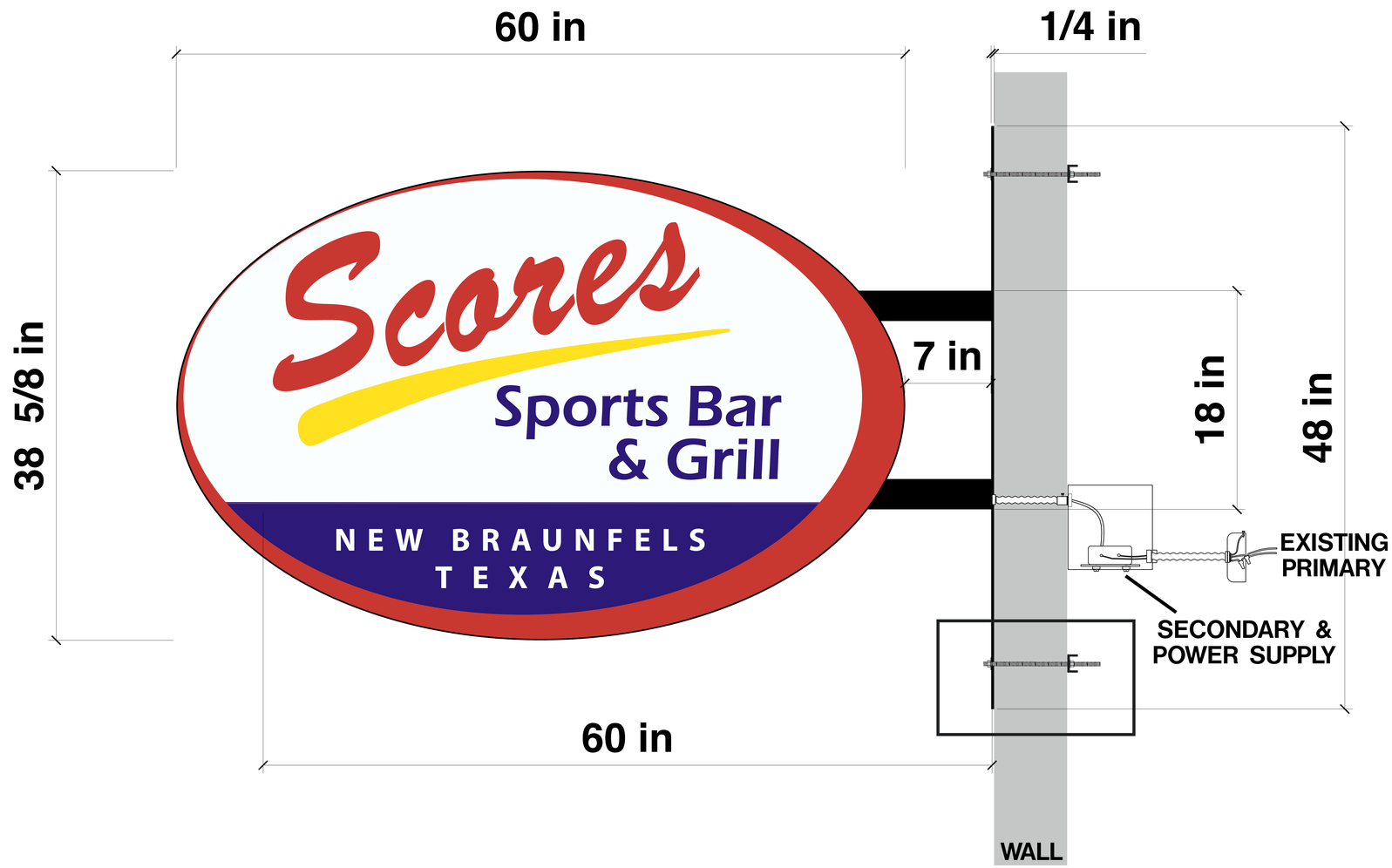

SIGN CRAFTERS
2401 I-35 S. San Marcos, TX 78666
(512) 392-0900 (512) 392-3363 Fax
www.signcrafters.net

This original unpublished drawing is the property of Sign Crafters and is submitted for personal use only in conjunction with the planning of the expressed project. This drawing is not to be reproduced, used or exhibited in any fashion without permission from Sign Crafters. Unauthorized use constitutes customer approval of all associated creative, drafting and engineering fees. This representation is for illustrative purposes only and may not accurately reflect actual size or specifications. Sign Crafters shall not be held responsible or liable for any discrepancy whatsoever between the illustration and the actual signage itself.

CLIENT	FILE Austin/C/Jobs/Score Sports Bar	DATE 12-15-2020
APPROVAL	DATE	WITH CHANGES AS NOTED
TYPE OF SIGNAGE		SCALE N.T.S.
INSTALL	LOCATION	ARTIST Austin

Historic Landmark Commission Agenda Item Report

2/9/2021

Agenda Item No.

Presenter/Contact
Caleb Gasparek, Historic Preservation Officer
(830) 221-4086 - Cgasparek@nbtexas.org

Subject:
HST21-001 Discuss and consider a Certificate of Alteration to demolish a single-family dwelling addressed at 456 Magazine Avenue, located within the Sophienburg Hill Historic District.

Background:

Case #: HST21-001

Owner: Ryan McWhirter & Monica Jergins

Applicant: David Walters
220 Lark Lane
New Braunfels, Tx 78130

Architect: Christian Laijas, Laijas Project Resource Group
PO Box 310394
New Braunfels, Tx 78130

The case was reviewed and denied by the Historic Landmark Commission at their regular meeting on January 12, 2021. The applicant has requested a resubmittal for review before the Historic Landmark Commission with revised plans and further details on the state of the foundation and an asbestos report.

The subject property is a rectangular shaped lot of approximately 17,500 square feet on the south side of Magazine Avenue, within the Sophienburg Hill Historic District. In the Summer of 2020, a historic aged accessory structure and driveway were demolished on site without a permit. The property owners received a notice of violation and are going through the resolution process on that action. In the meantime, they are seeking appropriate authorization to demolish the principal structure on the lot. The Historic Landmark Commission is only reviewing the demolition at this time. If the demolition is approved, the applicant will come back for a Certificate of Alteration for the new construction.

Historic Context:
The Comal Appraisal District indicates that the current dwelling was constructed in 1948. This is consistent with the 1949 Sanborn Fire Insurance map which shows the building in its existing footprint. The demolished accessory structure also appears on the 1949 map. Prior to construction in 1948, a single-family dwelling and accessory retail store were present on the property.

Deed records indicate that Monroe and Alice Nuhn lived in the house from 1948 to 1967. Monroe was a proprietor of beer before serving as a fire captain with the City of New Braunfels throughout the 1940's and 1950's.

Architecturally the dwelling is a modest example of the colonial revival ranch style house. With the exception of the rear patio, the building's footprint is largely unchanged from when it was constructed in 1948.

Request:
The applicant is requesting a certificate of alteration to demolish the 1948 single family dwelling. Only the demolition is under review at this time, the applicant has provided asbestos details as well as information about what they would like in the new construction.

Staff Analysis:
According to Chapter 66 subsection 60, a certificate of alteration is required for the demolition of any historic landmark or property located within a historic district.

Though the dwelling is one of the later to be constructed in the Sophienburg Hill Historic District, the building appears externally to be largely unaltered with the exception of the rear patio from when it was constructed in 1948. Externally the building appears to be in good condition.

Additionally, there was a report compiled by staff in 2010 from when Magazine Avenue was added to the Sophienburg Hill Historic District stating that "based on the existing housing stock and history, the Period of Significance is 1856 to 1940" for the houses between Coll and Jahn Streets. With a construction date of 1948, the dwelling is outside of the stated period of significance from that report.

Attachments:
1. Location Map
2. Application
3. 1949 Sanborn Map
4. Photographs
5. Asbestos Report
6. Structural Letter
7. Applicant Email

456 Magazine Ave.

Map Created: 1/7/2021

City of New Braunfels
PLANNING & DEVELOPMENT SERVICES

Planning & Development Services
Historic Preservation
550 Landa Street
New Braunfels, Texas 78130
(830) 221-4086 www.nbtexas.org

Case No: _____

Meeting Date: _____

☐ Historic District

☐ Historic Landmark

Submittal date – office use only

APPLICATION FOR A CERTIFICATE OF ALTERATION FOR A CITY LANDMARK OR LOCAL HISTORIC DISTRICT

NO FEE

Submit this Certification of Alteration application for review prior to submitting for any required building permit applications. Any variances, special exceptions or special approvals must be approved prior to submitting this application and any approvals shall be included in the application. A Certificate of Alteration does not substitute for or supersede any other permit reviews.

The Historic Preservation Officer (HPO) may approve certain minor projects without a review by the Historic Landmark Commission. Minor projects include routine maintenance and repair and limited minor alterations. Contact Caleb Gasparek (830-221-4086 or CGasparek@nbtexas.org) if you have questions about whether or not your project qualifies for administrative approval.

1. APPLICANT INFORMATION:

Name: DAVID WALTERS

Mailing Address: 220 LARK LANE

City/State/ZIP: NEW BRAUNFELS, TX 78132

Telephone: 830-708-1534 ***Email:*** davidwalters15@yahoo.com

2. PROPERTY OWNER (IF NOT APPLICANT*):

****Letter of Authorization is required if the applicant is not the property owner.***

Name: RYAN McWHIRTER & MONICA JERGINS

Mailing Address: _____

City/State/ZIP: NEW BRAUNFELS, TX 78130

Telephone: 210-823-7365 ***Email:*** ryan@lushgreenscape.com

3. ARCHITECT OR CONTRACTOR:

Name: CHRISTIAN LAIJAS

Company Name: LAIJAS PROJECT RESOURCE GROUP

Mailing Address: PO BOX 310394

City/State/ZIP: NEW BRAUNFELS, TX 78130

Telephone: 210-710-2667 ***Email:*** claijas20@gmail.com

4. SUBJECT PROPERTY:

Property Address/Location: 456 MAGAZINE AVENUE, NEW BRAUNFELS, TEXAS 78130

Legal Description:

Name of Subdivision: _____

Lot(s): _____ ***Block(s):*** _____ ***Acreage:*** _____

Existing Use of Property: RESIDENTIAL

5. SCOPE OF WORK (ATTACH ADDITIONAL PAGES IF NECESSARY):

DEMOLISH EXISTING RESIDENTIAL STRUCTRUE AND CONSTRUCT A NEW RESIDENTIAL STRUCTURE

The Historic Landmark Commission (HLC) reviews proposed exterior and site changes to City Historic Landmarks and properties in Local Historic Districts to assist owners in retaining the character-defining architectural features of important historic sites and districts. An approved Certificate of Alteration from the HLC is required in advance of performing all non-routine exterior and site work, including installation of signage. Your building permit will not be released without an approved Certificate of Alteration review by the City Historic Preservation Officer (HPO) or the HLC.

A Certificate of Alteration is required for all non-routine exterior work, including:

- Alterations to historic materials;
- Alterations to the visual appearance of a site;
- Alterations to building façade;
- Additions to existing buildings;
- Re-cladding;
- Window replacement;
- Construction of new buildings;
- Changes in roof color or materials;
- Major landscape work (including pools);
- Changes in sidewalks; and,
- Changes in driveways.
- Demolition of buildings within historic districts

Historic Landmark Commission review is usually not required for ordinary maintenance work such as re-painting and performing routine repairs using like materials. Please check with the City HPO if you are uncertain whether an HLC review is required.

SUBMITTAL CHECKLIST:

STAFF:	APPLICANT:	
☐	☒	**Completed application**
		Please note: Any application that is missing information will be considered incomplete and cannot be accepted.
☐	☒	**Dimensioned and scaled building plans**
		Please note: For review purposes electronic submittal of plans in PDF format is preferred. If hard copies are submitted original plans should be no larger than 11" x 17" and be of a good, reproducible quality. Inaccurate or non-legible site plans can result in a delay with the application review.
		Must include the following documents:
		☐ Site plan (one for existing and one for proposed conditions. Must indicate all proposed site changes, such as additions, alterations, new construction or demolition)
		☐ Elevation plans (must specify all exterior changes and exterior building materials and finishes to be used, i.e., siding, roofing, windows, doors, fences, etc.)
		☐ Floor plans
		☐ Roof plan
☐	☒	**Material samples, specifications or manufacturer information**
☐	☒	**Color photographs of the structure and site**
		Please note: For review purposes electronic submittal of photos is preferred.
		Must include the following:
		☐ Overall elevation views
		☐ Close-ups of all affected areas being modified

The signature of owner authorizes City of New Braunfels staff to visit and inspect the property for which this application is being submitted. The signature also indicates that the applicant or their agent has reviewed the requirements of this application/checklist and all items on this checklist have been addressed and complied with.

Property Owner's Signature: _____ ***Date:*** _____

Applicant Signature: _____ ***Date:*** _____

KEEP THIS SECTION FOR YOUR RECORDS

Submittal Process:

1. Complete the application for a Certificate of Alteration for a City Landmark or Local Historic District with all required information, plans, and photographs.
2. Submit all application materials to the HPO.
3. Preliminary Review by HPO.
    - Applicants may have their projects reviewed by the HPO prior to submitting for final review by the Historic Landmark Commission (HLC). The HPO provides informal review of projects, may suggest revisions to plans and specifications to meet standards, and makes recommendations to the HLC regarding applications.
4. Historic Landmark Commission Meetings.
    - The HLC generally meets on the second Tuesday of every month at 8:30 a.m., unless otherwise announced. Applicants or their agent are advised to attend the meeting to present information to the HLC and to answer any questions the HLC may have regarding the project. Failure to attend a HLC meeting may result in a postponement or denial of your application.
5. Reviewed plans.
    - Once reviewed by the HLC, the HPO will provide a signed Certificate of Approval to the applicant within 10 business days after the meeting, unless further information is required by the HLC for release of the permit. A copy of the signed Certificate of Approval should be submitted to the Building Division with the building permit application.

GENERAL DESIGN GUIDELINES USED FOR REVIEW OF CERTIFICATES OF APPROPRIATESS FOR CITY LANDMARKS

The following guidelines, based upon the Secretary of the Interior's Standards for the Rehabilitation of Historic Properties, are used to review projects in the Local Historic District and those that involve Local Historic Landmarks:

- Every reasonable effort shall be made to adapt the property in a manner which requires minimal alteration of the building, structure, object, or site and its environment.
- The distinguishing original qualities or character of a building, structure, object, or site and its environment shall not be destroyed when possible. The removal or alteration of any historic material or distinctive architectural features should be avoided when possible.
- All buildings, structures, objects, and sites shall be recognized as products of their own time. Alterations that have no historical basis and which seek to create an earlier appearance shall be discouraged.
- Changes which may have taken place in the course of time are evidence of the history and development of a building, structure, object, or site and its environment. These changes may have acquired significance in their own right, and this significance shall be recognized and respected.
- Distinctive stylistic features or examples of skilled craftsmanship which characterize a building, structure, object, or site shall be kept where possible.
- Deteriorated architectural features shall be repaired rather than replaced, wherever possible. In the event replacement is necessary, the new material shall reflect the material being replaced in composition, design, color, texture, and other visual qualities. Repair or replacement of missing architectural features should be based on accurate duplications of features, substantiated by historical, physical, or pictorial evidence rather than on conjectural designs or the availability of different architectural elements from other buildings or structures.
- The surface cleaning of structures shall be undertaken with the gentlest means possible. Sandblasting and other cleaning methods that will damage the historic building materials shall not be undertaken.
- Every reasonable effort shall be made to protect and preserve archeological resources affected by, or adjacent to, any project.
- Contemporary design for alterations and additions to existing properties shall not be discouraged when such alterations and additions do not destroy significant historical, architectural, or cultural material, and such design is compatible with the size, scale, color, material, and character of the property, neighborhood, or environment.

City of New Braunfels

PLANNING & DEVELOPMENT SERVICES

2020-2021 HISTORIC LANDMARK COMMISSION MEETING CALENDAR

MEETINGS ARE HELD VIA ZOOM UNTIL FURHTER NOTICE

Meeting Date (2ND TUESDAY OF EVERY MONTH AT 8:30 AM)	Application Deadline
Tuesday, November 10, 2020	Tuesday, November 3, 2020
Tuesday, December 8, 2020	Tuesday, December 1, 2020
Tuesday, January 12, 2021	Tuesday, January 5, 2021
Tuesday, February 9, 2021	Tuesday, February 2, 2021
Tuesday, March 9, 2021	Tuesday, March 2, 2021
Tuesday, April 13, 2021	Tuesday, April 6, 2021
Tuesday, May 11, 2021	Tuesday, May 4, 2021
Tuesday, June 8, 2021	Tuesday, June 1, 2021
Tuesday, July 13, 2021	Tuesday, July 6, 2021
Tuesday, August 10, 2021	Tuesday, August 3, 2021
Tuesday, September 14, 2021	Tuesday, September 7, 2021
Tuesday, October 12, 2021	Tuesday, October 5, 2021
Tuesday, November 9, 2021	Tuesday, November 2, 2021
Tuesday, December 14, 2021	Tuesday, December 7, 2021

4061
SHED
A
ASB. CL.
409
28
27
24
1A. CL.
31
ASB. CL.
D.
ASB.
CL.
375
391
403
411 MAGAZINE
427 MAGAZINE
445
455
465
475
479
4" W.P.
50'
206
372
D.H.
410
114
434
446
456
218
470
30'
PRIVATE
J.
VEND.
F
6
H.
ASB. CL.
A.&D.
4058
5
4
3
206½
206⅓
3000 GAL. W.TK. 40' ON RF.
HYD. 150' 2½" HOSE (SUPPLIED BY 3,000 GAL W.TK.)
BATH HO.
Fire Proof cons CONC.
HYD
FL.

456

DEKD environmental
Asbestos, Lead and Mold Testing
Environmental Consulting Services
7411 Barlite Blvd. #240014 San Antonio, TX, 78224 210.951.0227

January 15, 2021

RE: Limited Asbestos Survey Report
Monica Jergins
456 Magazine Avenue
New Braunfels, Texas 78130

To Whom it May Concern

DEKD Environmental (DEKD) is pleased to submit this Limited Asbestos Survey report for the above-referenced site. The asbestos survey was conducted on January 14, 2021 by Dyna Salahuddin, Texas Department of State Health Services (TDSHS) Asbestos Consultant License No. 105831. In summary, for the purpose of this limited survey, one of the four samples collected contained asbestos.

BUILDING COMPOSITION

The home at 456 Magazine Avenue is located in Comal County, was built in 1948, and is approximately 2000 square feet. The exterior siding of the house is asbestos containing transite (Fig.1), except the eastside and a south portion of the home that has fiber cement boards and natural wood planks, respectively. The wooden windows have tested positive for lead based paint and have white glazing around the glass (Fig.2). The interior space has wooden floors, and the walls are comprised of texture, joint compound, fasteners, and drywall (Fig.3). The attic space insulated with yellow and pink fiberglass insulation (Fig.4), and the HVAC system does not have mastic on the seams. The vent pipes are made of polyvinyl chloride (PVC) and the chimney pipe is stainless steel.

PURPOSE AND SCOPE

The purpose of this survey is to determine the presence of asbestos-containing building material (ACBM) that may be impacted in the renovation/demolition of the property. DEKD representative performed a limited visual inspection of the renovation/demolition targeted areas to determine the presence of ACBM. DEKD collected samples of the siding, window glazing, and the drywall for analysis. The number of samples collected from each homogeneous area is determined by the DEKD, accredited, asbestos inspector utilizing federal, state, and local guidelines and requirements. Sample locations are selected in order to best represent the entire homogenous area.

The asbestos survey services were performed in compliance with the Texas Asbestos Health Protection Rules (TAHPR) and the TDSHS. DEKD generally follows the sampling protocols in an effort to collect representative samples of the homogeneous areas of the suspect building materials in the client identified target areas. If specific homogeneous areas were not sampled, they must be assumed to contain asbestos until testing proves otherwise.

ASBESTOS OVERVIEW

Asbestos is a naturally occurring mineral that is distinguished from other minerals by the fact that it occurs in long, thin fibers. Its characteristics are that it does not burn, it is strong, it conducts heat and electricity poorly, and it is impervious to chemical corrosion. Asbestos has historically been a component of a wide variety of building materials. These types of building materials, which may potentially contain asbestos, are termed “suspect” asbestos-containing building materials (suspect ACBM). Typically, ACBM can be found as: fireproofing material on the steel beams of multi-story buildings; roofing shingles, felts, tars, floor tiles and mastic, acoustic ceiling, wall texture, joint

compound, and Thermal System Insulation (TSI) for pipes, ducts, and joints. Over a period of years these asbestos containing materials may become friable, that is pulverized by hand pressure, thus releasing fibers into the air. Suspect ACBM may or may not contain asbestos, and the actual asbestos content of a suspect material can only be determined through proper sampling and analysis performed by a qualified building inspector and licensed laboratory.

SAMPLING AND ANALYSIS PROCEDURES

DEKD representative collected samples of identified and reasonably accessible suspect ACBM within the target areas. Suspect ACBM samples were collected from a discreet location by physically removing a small portion of the suspect material using a sharp instrument. Disturbance of adjacent material was minimized during the sampling activities. Each sample was placed in a separate labeled container and then sealed. The sample's number and location were then recorded on a chain of-custody form. The sampling instrument was cleaned between each sample collected to mitigate potential cross-contamination between samples collected.

STANDARD OF CARE AND LIMITATIONS

This report was prepared for the exclusive use of the client, Monica Jergins, to aid in the identification and management of ACBM in the renovation/demolition target areas. DEKD performed its services in a manner consistent with the level of care and expertise exercised by asbestos professionals performing the same or similar services at the same time and in the same geographic area.

The results, findings and conclusions documented in this report are based solely on conditions observed the day of the inspection. DEKD makes no representations or assumptions as to past or future conditions of the premises or building material content. DEKD representative executed the enclosed ACBM inspection in areas (as directed by those authorizing the work to be done) that may be impacted during future renovation or demolition tasks. Unless directed otherwise, inspection methods used were non-destructive; that is, existing materials were not significantly disturbed or demolished in order to verify the presence of hidden ACBM. As in all ACBM testing events, bulk samples (small physical specimens) are required and were collected in the most discrete method possible in order to maintain the visual appearance of the premises. DEKD is not responsible for damage or repair to areas where bulk samples were required to satisfy the authorized work to be completed.

The building owner, tenant, personnel, and their authorized contractors are solely responsible for reviewing and communicating with their personnel the content of the enclosed ACBM tested (whether they tested positive for ACBM or not). Furthermore, inaccessible materials (i.e., areas where no access was possible or permitted) were not documented or tested. Additional materials found that do not appear to match the description of the enclosed sample results must be tested prior to disturbance. Materials visually identified as non-asbestos were not sampled (i.e., fiberglass, foam, rubber, wood, carpet, glass, etc.). As authorized, this report has been generated to comply with regulatory requirements and assist in the identification of ACBM at the project site. The enclosed is not intended to be utilized as a State required asbestos abatement work plan (Design Specifications) or as a bidding document for asbestos abatement. DEKD licensed, and certified personnel are available to assist with said documentation if it is required for this project.

CONCLUSIONS AND RECOMMENDATIONS

The following is a summary of results of the asbestos testing conducted by Dyna Salahuddin; a total of four (04) samples of suspect ACBM were collected. These samples were sent to Environmental Analytical Services, in Houston, Texas, TDSHS Laboratory License No.: 30-0373, for analysis by Polarized Light Microscopy (PLM) in accordance with EPA 600/R-93/116 Method.

SUMMARY OF LABORATORY RESULTS:

Sample No.	Location	Material	Results
456-TR-01	**West Exterior Wall**	**Transite Siding**	**40% Chrysotile**
456-WG-02	South Exterior Window	Window Glazing	NAD
456-WG-01	West Exterior Window	Window Glazing	NAD
456-SR-04	West Interior Wall	Texture/Joint Compound/Drywall	NAD
NAD – No Asbestos Detected			
Laboratory analytical report is in Appendix B			

Based on the analytical results the following conclusions and recommendations are:

1. **All the following building materials have been laboratory analyzed to be asbestos containing and should be removed if the materials are to be disturbed during renovation/demolition (pictures in Appendix A):**
   - **Approximately 1300 ft^2 of asbestos-containing transite siding (Fig.1)**

2. **The asbestos containing material listed above should be removed by a Texas Licensed Asbestos Abatement Contractor under the supervision of a Texas Asbestos Consultant prior to renovation or demolition. Residences, however, are not subjected to state regulations, however, federal regulations, like OSHA, still apply.**

DEKD can provide services for a management plan, abatement design specifications, project management, and air monitoring should the need arise.

I appreciate the opportunity to provide environmental services to you on this project; if you or any permitting agencies have any questions concerning this report, or if I can assist you in any other environmental matter, please feel free to contact me at 210.202.9850

Sincerely,

Dyna Salahuddin
DEKD ENVIRONMENTAL
dyna@210dekdenterprises.com
Asbestos Individual Consultant #10-5831
Certifications in Appendix C

APPENDIX A
BUILDING PICTURES

456 Magazine Avenue

FIG.1

FIG.2

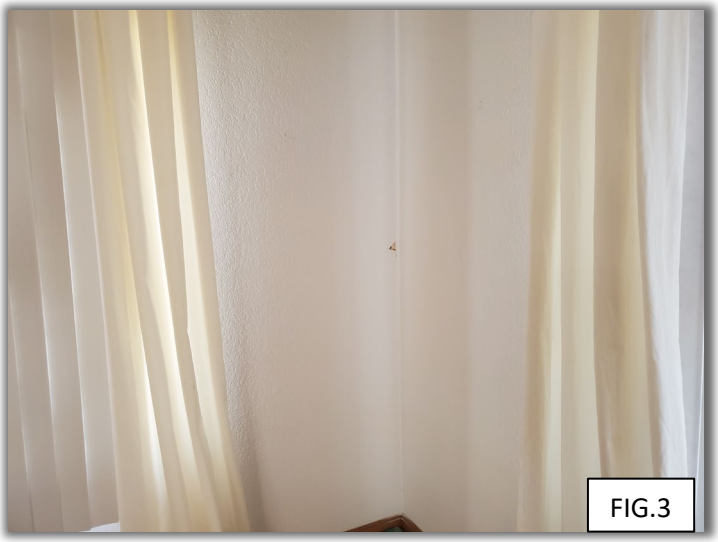

FIG.3

FIG.3

APPENDIX B
LABORATORY ANALYTICAL RESULTS

Environmental Analytical Services, LLC

13201 Northwest Freeway, Suite 520
Houston, Texas 77040
phone 713-343-4017 | fax 713-934-9942
www.easlabs.com | facebook.com/easlabs | info@easlabs.com

Test: EPA 600/R-93/116
Polarized Light Microscopy

Client Information:
DEKD Enterprises
7411 Barlite # 240014
San Antonio,TX 78224
Phone: 210-202-9850
E-Mail: dyna@dekdenterprises.com

Project:
456 Magazine Ave
01142021107
EAS Job: 21011500
Attn: Dyna Salahuddin

Date Analyzed: 01/15/2021 10:17 AM
Date Received: 01/15/2021 09:21 AM
TAT Requested: 2 hours
Microscope: PLM Olympus BH-2

Sample # Lab ID #	Layer	Sample Description	Asbestos Detected (Yes/No)	Asbestos Mineral Percent	Non-Asbestos Fibers	Non-Fibrous Material
456-TR-01 21011500.01	A	Gray Fibrous Transite Siding Homogeneous	**YES**	**Chrysotile 40%**		Binders 60%
456-WG-02 21011500.02	A	White Glazing Homogeneous	**NO**	**None Detected**	Cellulose 2%	Other Non-Fibrous 98%
456-WG-03 21011500.03	A	White Glazing Homogeneous	**NO**	**None Detected**	Cellulose 2%	Other Non-Fibrous 98%
456-SR-04 21011500.04	A	White Texture Homogeneous	**NO**	**None Detected**	Cellulose 2%	Binders 98%
456-SR-04 21011500.04	B	White Joint Compound Homogeneous	**NO**	**None Detected**	Cellulose 2%	Binders 98%
456-SR-04 21011500.04	C	Brown/White Fibrous Drywall Non-Homogeneous	**NO**	**None Detected**	Cellulose 20%	Binders 80%

NVLAP Lab Code: 200784-0
TDSHS License No. 300373
LDEQ LELAP Certificate No: 04161, Agency Interest No. 149571

Notes:
Some samples (floor tiles, surfacing, etc.) may contain fibers too small to be detectable by PLM. TEM Chatfield analysis of bulk material is recommended in this case. All asbestos percentages are based on calibrated visual estimates traceable to NIST standards for regulated asbestos types. Analysts' percentages fall within a range of acceptable percentages, depending on the actual concentration of asbestos. This test report relates only to the items tested. This report must not be used to claim product certification, approval, or endorsement by NVLAP, NIST, or any agency of the Federal Government. This report may not be reproduced except in full without permission from Environmental Analytical Services.

These results are submitted pursuant to EAS' current terms of sale, including the company's standard warranty and limitation of liability provisions and no responsibility or liability is assumed for the manner in which the results are used or interpreted. Unless notified in writing to return the samples covered by this report, EAS will store the samples for a period of ninety (90) days before discarding. Percent ranges reported are estimates and not absolute percent range values.

Analyzed By: Terry Brindley
Terry Brindley

Approved Signatory: Terry Brindley
Terry Brindley

21011500

Environmental Analytical Services, LLC

13201 Northwest Freeway, Suite 520
Houston, Texas 77040
(713) 343-4017 Fax (713) 934-9942
www.easlabs.com, arthur@easlabs.com
facebook.com/easlabs

* Job ID:21011500

DEKD Enterprises

CHAIN OF CUSTODY

Bulk Sample Data

Client Name / Address:	Project Name:	
DEKD Environmental 7411 Barlite Blvd. #240014 San Antonio, Texas 78224	456 Magazine Ave.	
Quantity / Analysis Requested:	Project Number:	EAS PO Number: (if applicable)
4/PLM	01142021107	

Turnaround Time: X 2 Hour 8 Hour 24 Hour 2 Day 3 Day 5 Day (Routine) Other: (Specify)

(Note: All turnaround times are based on the date / time the sample is received by the laboratory)

Contact: Dyna Salahuddin Phone: 210-202-9850

E-mail: dyna@dekdenterprises.com, lab@210dekdenterprises.com

Special Instructions:

Sample Number	Location	Sample Description (or see attached description)
456-TR-01	west exterior wall	transite siding
456-WG-02	south window - exterior	window glazing
456-WG-03	west window - exterior	window glazing
456-SR-04	west interior wall	texture/joint compound/sheetrock

Relinquished By: [signature]
Date/Time: 1.14.2021 1400

Accepted By: [signature]
Date/Time: 1-15-21 9:21a

Rev 10/12 Like us on facebook Page 1 of 1

APPENDIX C
ASBESTOS CERTIFICATIONS

Texas Department of State Health Services

ENVIRONMENTAL ANALYTICAL SERVICES LLC

is certified to perform as an

Asbestos Laboratory

PCM, PLM

in the State of Texas and is hereby governed by the rights, privileges and responsibilities set forth in Texas Occupations Code, Chapter 1954 and Title 12, Texas Administrative Code, Chapter 295 relating to Texas Asbestos Health Protection, as long as this license is not suspended or revoked.

License Number: 300373

Expiration Date: 03/12/2021

John Hellerstedt, M.D.,
Commissioner of Health

Control Number: 96364

(Void After Expiration Date)

VOID IF ALTERED NON-TRANSFERABLE

SEE BACK

Texas Department of State Health Services

Asbestos Individual Consultant

DYNA O SALAHUDDIN

License No. **105831**

Control No. **97682**

Expiration Date: **7-Feb-2022**

AEHS, INC.

DSHS Asbestos Training Provider Certification # 000068

CERTIFIES THAT

DYNA SALAHUDDIN

has successfully completed

Asbestos Inspector Refresher

IN ACCORDANCE WITH ALL REQUIREMENTS OF TEXAS ASBESTOS HEALTH PROTECTION RULES and TSCA TITLE II

Certification Number	0620-4355C
Course Date	3 June 2020
Expiration Date	3 June 2021

Marcie Sinclair

Marcie Sinclair, MS, REM
Training Manager

AEHS, Inc.
4402 Centergate St.
San Antonio, TX 78217
(210) 656-9300
www.aehs-sa.com

Kelly M Brown

Kelly Brown, IAC
Instructor

Christian Laijas
P.O. Box 310394
New Braunfels, Texas 78130
210-710-2667
claijas20@gmail.com

February 4, 2021

Reference: **245 Magazine Ave.**
New Braunfels, TX 78130

To whom it may concern,

The purpose of this letter is to highlight the findings of our structural site observation on July 18, 2020. No flooring, sheetrock, or paneling was removed during the site visit. Our team viewed this residential structure in its current condition and concluded the following:

Foundation

1. Pier and beam foundation with lumber post and lumber floor joists.
2. Unlevel flooring in various locations indicating foundation settling.
3. Stormwater has caused erosion on the northwest side.
4. Visible damage of floor joist and posts due to potential termite and/or rot.
5. Cracking in sheet rock wall and ceilings indicate foundation settling.

Framing

1. Lumber framed walls and roof trusses.
2. Mold visible in various locations indicating moisture exposure.

Further investigation will be needed to determine the exact severity of some of the items mentioned above. Per the City of New Braunfels ordinance, a remodel due to unsafe conditions, owner request, or structural integrity will prompt the proposed structure to conform with current IBC/IRC standards.

As stated above, his letter is intended to provide comments based on a site observation of the structural integrity of the property in question. It is our recommendation that the foundation and framing of this structure be investigated further.

Sincerely,

Christian Laijas

From: Monica
To: Caleb Gasparek
Subject: 456 magazine
Date: Thursday, February 4, 2021 7:35:09 AM

Caution: This email originated from outside of the organization. Do not click links or open attachments unless you recognize the sender and know the content is safe.

Our inspiration house

Sent from my iPhone

2/9/2021

Agenda Item No.

Presenter/Contact
Caleb Gasparek, Historic Preservation Officer
(830) 221-4086 - Cgasparek@nbtexas.org

Subject:
HST21-048 Discuss and consider a Certificate of Alteration to attach a sign to the commercial building addressed as 1255 Gruene Road, a landmarked structure known as the Ottmar Gruene House.

Background:

Case #:	HST21-048
Owner:	Virginia Huges
Applicant:	Radio Heart Studios, DBA NB Signs and Design 1229 Industrial Dr., Suite F New Braunfels, TX 78130

The subject property is located on the west side of Gruene Road, just south of Hunter Road and east of the Guadalupe River.

Historic Context:
An earlier frame house built by Henry D. Gruene existed on the subject site from 1894 to 1925. Henry constructed the house for his son Ottmar on the occasion of his marriage. When Henry retired in 1910, Ottmar and his brother Max took over the Gruene business.

Max died of influenza in 1918, and Henry passed away 2 years later in 1920. In 1925 Ottmar made plans to build a new brick house on the site where the existing frame house was. The original house was cut and divided onto two separate, neighboring lots. One of the portions burned down in the 1950's and is no longer extant. Ottmar resided within the house during the construction of his brick house. The house was later owned by J. B. Stubbs, the business accountant of the Gruene business. Later, Ottmar's son Ernest and his wife resided in the house. The house was designated as a local landmark by City Council in 1987.

Request:
The applicant is requesting a Certificate of Alteration to erect an attached metal sign onto the wood eve of the building. The sign measures 25 inches high and 156 inches long. The sign will read "Currents" and is painted in a matte black color.

Staff Analysis:
The proposed sign is consistent in design with others found in the surrounding Gruene National

Historic District. If the Historic Landmark Commission is inclined to approve, staff recommends the applicant take care when installing the sign, using existing mounting fixtures if possible. If new bolts are to be installed, care should be taken to not irrevocably damage the historic siding of the Ottmar Gruene House.

Attachments:

1. Location Map
2. Application
3. Sign Renderings

1255 Gruene Road

Map Created: 2/3/2021

City of New Braunfels
PLANNING & DEVELOPMENT SERVICES

Planning & Development Services
Historic Preservation
550 Landa Street
New Braunfels, Texas 78130
(830) 221-4086 www.nbtexas.org

Case No: HST21 - 048
Meeting Date: 2-9-21
☐ Historic District
☑ Historic Landmark
OTTMAR GRUENE HOUSE
Submittal date – office use only

REFERENCE CP2021-017

APPLICATION FOR A CERTIFICATE OF ALTERATION FOR A CITY LANDMARK OR LOCAL HISTORIC DISTRICT

NO FEE

Submit this Certification of Alteration application for review prior to submitting for any required building permit applications. Any variances, special exceptions or special approvals must be approved prior to submitting this application and any approvals shall be included in the application. A Certificate of Alteration does not substitute for or supersede any other permit reviews.

The Historic Preservation Officer (HPO) may approve certain minor projects without a review by the Historic Landmark Commission. Minor projects include routine maintenance and repair and limited minor alterations. Contact Caleb Gasparek (830-221-4086 or CGasparek@nbtexas.org) if you have questions about whether or not your project qualifies for administrative approval.

1. **APPLICANT INFORMATION:**

Name: Yvette Englehart-Peterson

Mailing Address: 1255 Gruene Road

City/State/ZIP: New Braunfels, TX 78130

Telephone: 361-290-8293 ***Email:*** yvette.ehartpeterson@icloud.com

2. **PROPERTY OWNER (IF NOT APPLICANT*):**

Letter of Authorization is required if the applicant is not the property owner.

Name: Virginia Huges

Mailing Address: 301 MAIN PLAZA #392

City/State/ZIP: New Braunfels, TX 78130

Telephone: 830-907-2185 ***Email:*** virginia@hughesinterests.com

3. **ARCHITECT OR CONTRACTOR:**

Name: Radio Heart Studios, DBA NB Signs and Design

Company Name: NB Signs & Design

Mailing Address: 1229 Industrial Dr, Suite F

City/State/ZIP: New Braunfels, TX 78130

Telephone: 830.627.9120 ***Email:*** jayne@nbsignsanddesign.com

4. **SUBJECT PROPERTY:**

Property Address/Location: 1255 Gruene Road, New Braunfels, TX 78130

Legal Description:

Name of Subdivision: n/a

Lot(s): 12AB ***Block(s):*** H ***Acreage:***

Existing Use of Property: Retail

5. **SCOPE OF WORK (ATTACH ADDITIONAL PAGES IF NECESSARY):**

(1) Set of 25" Flat Cut Metal Letters (to read: CURRENTS), Matte Black painted, 1.5" Depth, installed directly on wood eve of building.

The Historic Landmark Commission (HLC) reviews proposed exterior and site changes to City Historic Landmarks and properties in Local Historic Districts to assist owners in retaining the character-defining architectural features of important historic sites and districts. An approved Certificate of Alteration from the HLC is required in advance of performing all non-routine exterior and site work, including installation of signage. Your building permit will not be released without an approved Certificate of Alteration review by the City Historic Preservation Officer (HPO) or the HLC.

A Certificate of Alteration is required for all non-routine exterior work, including:

- Alterations to historic materials;
- Alterations to the visual appearance of a site;
- Alterations to building façade;
- Additions to existing buildings;
- Re-cladding;
- Window replacement;
- Construction of new buildings;
- Changes in roof color or materials;
- Major landscape work (including pools);
- Changes in sidewalks; and,
- Changes in driveways.
- Demolition of buildings within historic districts

Historic Landmark Commission review is usually not required for ordinary maintenance work such as re-painting and performing routine repairs using like materials. Please check with the City HPO if you are uncertain whether an HLC review is required.

SUBMITTAL CHECKLIST:

STAFF:	APPLICANT:	
☐	☒	**Completed application** **Please note:** Any application that is missing information will be considered incomplete and cannot be accepted.
☐	☒	**Dimensioned and scaled building plans** **Please note: For review purposes electronic submittal of plans in PDF format is preferred.** If hard copies are submitted original plans should be no larger than 11" x 17" and be of a good, reproducible quality. Inaccurate or non-legible site plans can result in a delay with the application review. ***Must include the following documents:*** ☐ Site plan (one for existing and one for proposed conditions. Must indicate all proposed site changes, such as additions, alterations, new construction or demolition) ☒ Elevation plans (must specify all exterior changes and exterior building materials and finishes to be used, i.e., siding, roofing, windows, doors, fences, etc.) ☐ Floor plans ☐ Roof plan (Optional)
☐	☐	**Material samples, specifications or manufacturer information (Optional)**
☐	☒	**Color photographs of the structure and site (Staff may require a site visit prior to meeting)**

The signature of owner authorizes City of New Braunfels staff to visit and inspect the property for which this application is being submitted. The signature also indicates that the applicant or their agent has reviewed the requirements of this application/checklist and all items on this checklist have been addressed and complied with.

Property Owner's Signature: Virginia Hughes
Virginia Hughes (Jan 29, 2021 09:58 CST) ***Date:*** Jan 29, 2021

Applicant Signature: Yvette Englehart-Peterson
Yvette Englehart-Peterson (Jan 29, 2021 11:32 CST) ***Date:*** Jan 29, 2021

Certificate of Alteration Application

Final Audit Report 2021-01-29

Created:	2021-01-25
By:	JAYNE GANARD-NEFF (jganardneff@gmail.com)
Status:	Signed
Transaction ID:	CBJCHBCAABAAnjlTqSfsmMJ2CqNFGjJ1L9mqzbXctpSg

"Certificate of Alteration Application" History

Document created by JAYNE GANARD-NEFF (jganardneff@gmail.com)
2021-01-25 - 11:32:37 PM GMT- IP address: 45.21.33.199

Document emailed to Virginia Hughes (virginia@hughesinterests.com) for signature
2021-01-25 - 11:33:31 PM GMT

Email viewed by Virginia Hughes (virginia@hughesinterests.com)
2021-01-26 - 12:02:02 PM GMT- IP address: 45.23.250.127

Email viewed by Virginia Hughes (virginia@hughesinterests.com)
2021-01-29 - 2:54:41 PM GMT- IP address: 45.23.250.127

Document e-signed by Virginia Hughes (virginia@hughesinterests.com)
Signature Date: 2021-01-29 - 3:58:10 PM GMT - Time Source: server- IP address: 45.23.250.150

Document emailed to Yvette Englehart-Peterson (yvette.ehartpeterson@icloud.com) for signature
2021-01-29 - 3:58:12 PM GMT

Email viewed by Yvette Englehart-Peterson (yvette.ehartpeterson@icloud.com)
2021-01-29 - 5:31:03 PM GMT- IP address: 23.122.44.100

Document e-signed by Yvette Englehart-Peterson (yvette.ehartpeterson@icloud.com)
Signature Date: 2021-01-29 - 5:32:20 PM GMT - Time Source: server- IP address: 23.122.44.100

Agreement completed.
2021-01-29 - 5:32:20 PM GMT

LETTER OF AUTHORITY

January 26, 2021

To whom it may concern;
I hereby authorize NB Signs and Yvette Englehart-Peterson to install the proposed sign at property 1255 Gruene Road. I also authorize the painting of the roof to Real Red, SW6868 by Sherwin Williams.

Sincerely yours,

Gordon & Virginia Hughes

ORDINANCE NO. 87-12

AN ORDINANCE DESIGNATING THE STRUCTURE AT 1255 GRUENE ROAD, KNOWN AS THE OTTMAR GRUENE HOUSE, AS A HISTORIC LANDMARK ACCORDING TO THE PROVISIONS OF ARTICLE VII, SECTIONS 27-66 THROUGH 27-76 OF THE CODE OF ORDINANCES OF THE CITY OF NEW BRAUNFELS; REPEALING ALL ORDINANCES IN CONFLICT; CONTAINNIG A SAVINGS CLAUSE AND DECLARING AN EFFECTIVE DATE

WHEREAS, the City Council of the City of New Braunfels has complied with all requirements of hearing and notice as required by Article VII, Sections 27-66 through 27-76 of the Code of Ordinances of the City of New Braunfels; and

WHEREAS, this structure has been recommended for historic designation by the owner, by the Historic Landmark Commission, and by the Planning and Zoning Commission; and

WHEREAS, the City Council wishes to protect this structure as a part of the heritage of New Braunfels for future generations; now, therefore,

BE IT ORDAINED BY THE CITY COUNCIL OF THE CITY OF NEW BRAUNFELS:

I

That the following described structure is hereby designated as a "Historic Landmark"; according to the provisions of Article VII, Sections 27-67 through 27-76 of the Code of Ordinances of the City of New Braunfels:

> "The structure located at 1255 Gruene Road, being located on Lot 2A, Block 1, Easley Resubdivision, and being known as The Ottmar Gruene House".

II

That the above described structure is hereby restricted as to the amount of method of change, construction, or demolition, that can take place in accord with Article VII, Chapter 27 of the Code of Ordinances of the City of New Braunfels.

REVIEWED FOR
CODE COMPLIANCE
City of New Braunfels
Building Safety Division

APPROVED
By AMendozarodriguez at 8:15 am, Jan 14, 2021

PROOF DETAILS

NB Signs & DESIGN

830.627.9120 | nbsignsanddesign.com
1229 Industrial Drive, Suite F | New Braunfels, TX 78130

THIS PROOF IS FOR YOUR APPROVAL. PLEASE READ AND CHECK ALL SPELLING, COLORS, SIZE, QUANTITY, AND IMPRINT LOCATIONS. WE WILL NOT BE HELD RESPONSIBLE FOR ANY ERRORS ON PRINTED PRODUCTS AFTER APPROVAL. BY SIGNING THIS FORM OR RESPONDING TO THE EMAIL WITH VERBIAGE INDICATING APPROVAL, YOU AGREE THAT YOU HAVE CHECKED THE ABOVE INFORMATION AND APPROVE THE ORDER TO GO INTO PRODUCTION.

Unpublished Work. NB Signs & Design. All rights reserved. The proof is artwork created by NB Signs & Design. It is submitted for your personal use and it may only be used in connection with the project being planned for you by NB Signs & Design. ©2020 NB SIGNS & DESIGN

25″

CURRENTS

156″

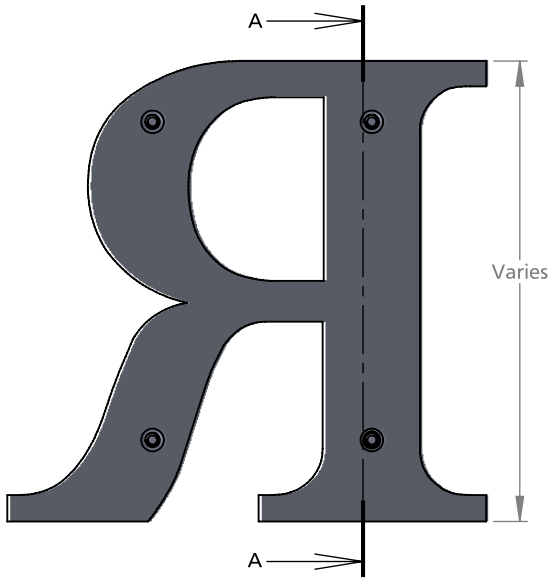

BACK VIEW II SCALE 1:2.5

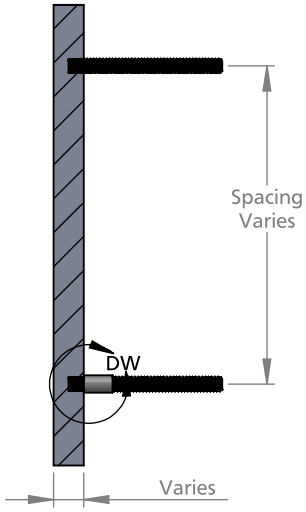

SECTION VIEW A-A II SCALE 1:2.5

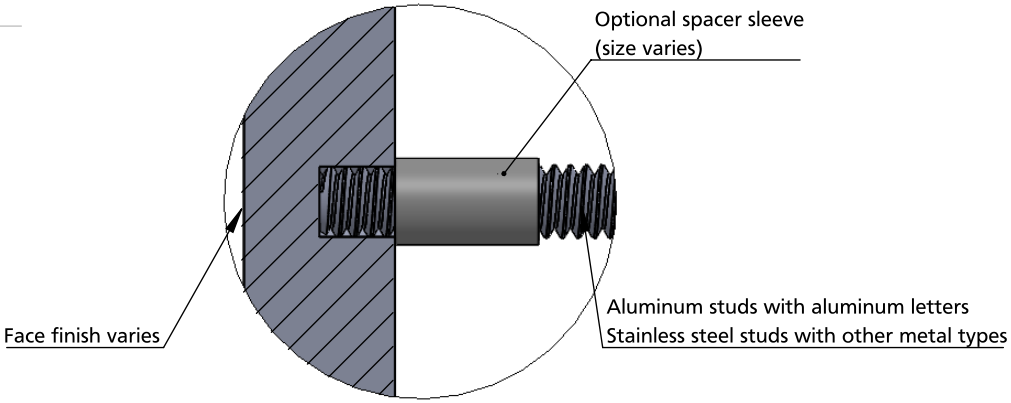

DETAIL DW II SCALE 2:1

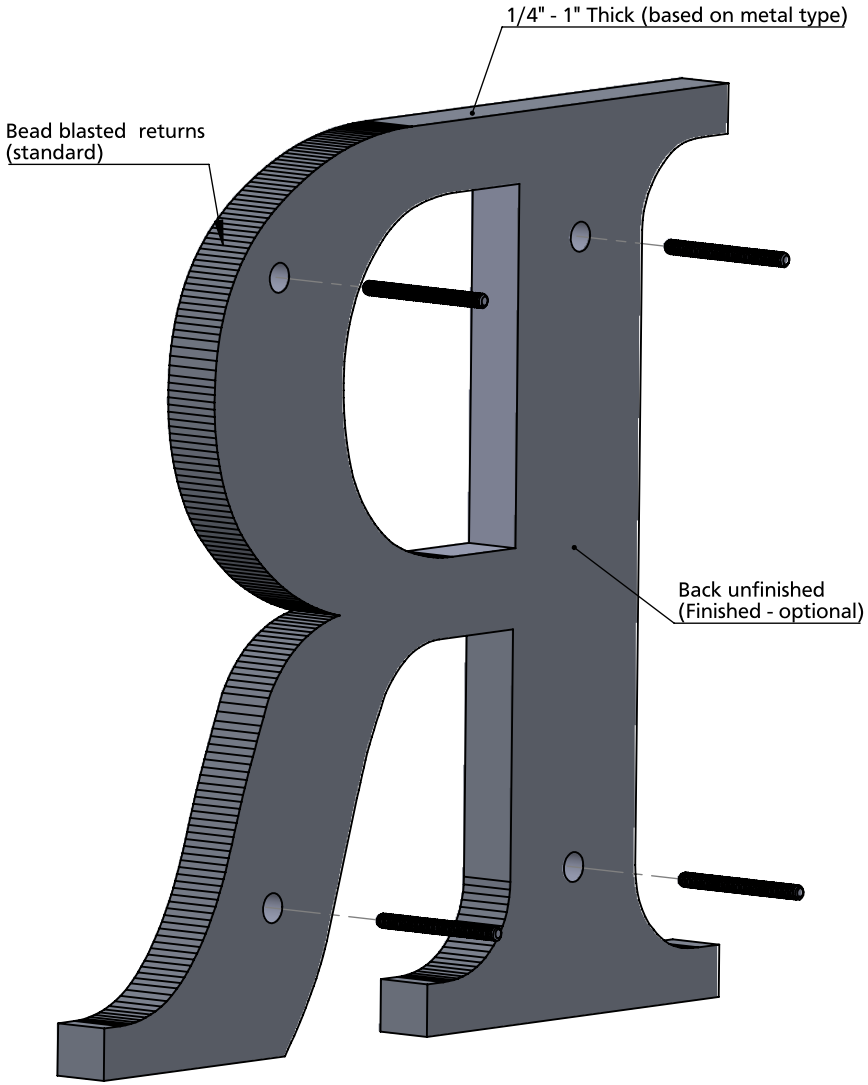

ISOMETRIC BACK VIEW II SCALE 1:2.5

SIZE	MIN STUDS/LTR
Up to 3"	3 studs
over 3" - 15"	4 studs
Over 15"	6 studs
Punctuation	2 studs

NOTES:
Typical stud length 2" beyond back of letter
Letters under 15" high - 10/24 studs, 15"+ high - 1/4-20 studs.
Less than 3/8" stroke, 6-32 or 4-46 studs
Standard cast studs are in line for brick mortar (2-5/8" on center for mortar)

TITLE:

FLAT CUT METAL - STUD MOUNT

MATERIAL:	PRODUCT TYPE:
METAL	FLAT CUT METAL

DWG NO. FTMT10	REV 12/02/14	SCALE: AS INDICATED	SHEET 1 OF 1

2/9/2021

Agenda Item No.

Presenter/Contact
Caleb Gasparek, Historic Preservation Officer
(830) 221-4086 - Cgasparek@nbtexas.org

Subject:
HST21-050 Discuss and consider a Certificate of Alteration to construct a 2-story addition to the dwelling at 307 North Guenther Avenue, a local landmark known as the Ikel's House.

Background:

Case #: HST21-050

Owner: Greg J. Williams

Applicant: Gregory J. Williams
307 N. Guenther Ave.
New Braunfels, Tx 78130

Architect: Gordon Colson, River Stone Designs Inc.
323 Buckhaven Dr.
Canyon Lake, TX 78133

The subject property is a rectangular shaped lot of approximately 8,000 square feet on the corner of North Guenther Avenue and Mill Street. The property is located just west of the Mill Street Historic District. The property became a local historic landmark in 2008. Additionally, a variance request for a side and rear setback encroachment was approved on December 18th, 2020.

Historic Context:
The subject dwelling was built in circa 1904 by German immigrant, William Ikels. A lien to the Pfieffer Lumber Company for building materials that same year suggests the build date of 1904.

Deed and census records suggest that William's son, William Jr. owned the house with his wife Anna. William Sr. is listed as a house builder in the 1900 census, with William Jr. being a farmer. In 1957 William Jr. and his wife Anna gifted the house to their only child, Loraine Ikels Keaft. The house remained in the family until 1968.

The house is a good example of the folk Victorian style that was popular in the early 20th in New Braunfels and much of the US. The house has some added Queen Anne detailing such as decorative friezes and brackets, a wrap-around porch with Doric columns, and decorative spindle railing.

Request:
The applicant is requesting a certificate of alteration to construct a two-story addition to the northwest

side of the existing home. The addition is proposed to include space for storage, a laundry room, additional bedrooms, and a home office. Parts of the existing home's roof are proposed to be raised to match the height of the tallest dormer. Additionally, a turret is proposed over the existing front porch.

Staff Analysis:

According to Chapter 66 subsection 58 - the Commission should consider the following criteria for the approval of an alteration certificate:

(1) Every reasonable effort shall be made to adapt the property in a manner which requires minimal alteration of the building, structure, object, or site and its environment.

(2) The distinguishing original qualities or character of a building, structure, object, or site and its environment shall not be destroyed when possible. The removal or alteration of any historic material or distinctive architectural features should be avoided when possible.

(3) All buildings, structures, objects, and sites shall be recognized as products of their own time. Alterations that have no historical basis and which seek to create an earlier appearance shall be discouraged.

(4) Changes which may have taken place in the course of time are evidence of the history and development of a building, structure, object, or site and its environment. These changes may have acquired significance in their own right, and this significance shall be recognized and respected.

(5) Distinctive stylistic features or examples of skilled craftsmanship which characterize a building, structure, object, or site shall be kept where possible.

(6) Deteriorated architectural features shall be repaired rather than replaced, wherever possible. In the event replacement is necessary, the new material shall reflect the material being replaced in composition, design, color, texture, and other visual qualities. Repair or replacement of missing architectural features should be based on accurate duplications of features, substantiated by historical, physical, or pictorial evidence rather than on conjectural designs or the availability of different architectural elements from other buildings or structures.

(7) The surface cleaning of structures shall be undertaken with the gentlest means possible. Sandblasting and other cleaning methods that will damage the historic building materials shall not be undertaken.

(8) Every reasonable effort shall be made to protect and preserve archeological resources affected by, or adjacent to, any project.

(9) Contemporary design for alterations and additions to existing properties shall not be discouraged when such alterations and additions do not destroy significant historical, architectural, or cultural material, and such design is compatible with the size, scale, color, material, and character of the property, neighborhood, or environment.

(10) Wherever possible, new additions or alterations to buildings, structures, objects, or sites shall be done in such a manner that if such additions or alterations were to be removed in the future, the essential form and integrity of the building, structure, object, or site would be unimpaired.

Site plans indicate that the proposed addition will add 2,321 square feet of space. Additionally, the renderings indicate that the existing siding will remain, with new siding, gable trim, and windows to match those of what is on the existing house.

While vertical additions to historic dwellings are not unheard of, they provide additional challenges when compared to extending horizontally. But, space to expand horizontally is often limited in historic districts. Criteria 9 and 10 from Chapters 66-68 should be evaluated when looking at the potential impact a sizable addition may have.

Attachments:

1. Location Map
2. Application
3. Photographs
4. Site Plan & Renderings
5. Variance Approval

307 N. Guenther

Map Created: 2/4/2021

City of New Braunfels
PLANNING & DEVELOPMENT SERVICES

Planning & Development Services
Historic Preservation
550 Landa Street
New Braunfels, Texas 78130
(830) 221-4086 www.nbtexas.org

Case No: _____
Meeting Date: _____
☐ Historic District
☐ Historic Landmark
Submittal date – office use only

APPLICATION FOR A CERTIFICATE OF ALTERATION FOR A CITY LANDMARK OR LOCAL HISTORIC DISTRICT

NO FEE

Submit this Certification of Alteration application for review prior to submitting for any required building permit applications. Any variances, special exceptions or special approvals must be approved prior to submitting this application and any approvals shall be included in the application. A Certificate of Alteration does not substitute for or supersede any other permit reviews.

The Historic Preservation Officer (HPO) may approve certain minor projects without a review by the Historic Landmark Commission. Minor projects include routine maintenance and repair and limited minor alterations. Contact Caleb Gasparek (830-221-4086 or CGasparek@nbtexas.org) if you have questions about whether or not your project qualifies for administrative approval.

1. APPLICANT INFORMATION:

Name: Gregory J. Williams

Mailing Address: 307 N. Guenther Ave.

City/State/ZIP: New Braunfels, Tx 78130

Telephone: (830) 481-4266 ***Email:*** drgwizz@gmail.com

2. PROPERTY OWNER (IF NOT APPLICANT*):

****Letter of Authorization is required if the applicant is not the property owner.***

Name: Same as applicant

Mailing Address: Same as applicant

City/State/ZIP: Same as applicant

Telephone: Same as applicant ***Email:*** Same as applicant

3. ARCHITECT OR CONTRACTOR:

Name: Gordon Colson

Company Name: River Stone Designs Inc. www.riverstonedesignsinc.com

Mailing Address: 323 Buckhaven Dr.

City/State/ZIP: Canyon Lake, Tx 78133

Telephone: (830) 832-8873 ***Email:*** _____

4. **SUBJECT PROPERTY:**

Property Address/Location: 307 N. Guenther Ave.

Legal Description:

Name of Subdivision: Henry Hoekes

Lot(s): 1,2,3 ***Block(s):*** 3024 ***Acreage:*** 0.184

Existing Use of Property: Primary residence

5. **SCOPE OF WORK (ATTACH ADDITIONAL PAGES IF NECESSARY):** Two-story addition to the NW side of the existing home. The addition will include space for storage, laundry room, additional bedrooms, and a home office. Parts of the existing home's roof will be raised to match the height of the tallest existing dormer (see attached plans). Addition of a turret that is consistent in design within the era the home was built. Upgrades to to the HVAC, plumbing, electrical, and foundation will be made.

The Historic Landmark Commission (HLC) reviews proposed exterior and site changes to City Historic Landmarks and properties in Local Historic Districts to assist owners in retaining the character-defining architectural features of important historic sites and districts. An approved Certificate of Alteration from the HLC is required in advance of performing all non-routine exterior and site work, including installation of signage. Your building permit will not be released without an approved Certificate of Alteration review by the City Historic Preservation Officer (HPO) or the HLC.

A Certificate of Alteration is required for all non-routine exterior work, including:

- Alterations to historic materials;
- Alterations to the visual appearance of a site;
- Alterations to building façade;
- Additions to existing buildings;
- Re-cladding;
- Window replacement;
- Construction of new buildings;
- Changes in roof color or materials;
- Major landscape work (including pools);
- Changes in sidewalks; and,
- Changes in driveways.
- Demolition of buildings within historic districts

Historic Landmark Commission review is usually not required for ordinary maintenance work such as re-painting and performing routine repairs using like materials. Please check with the City HPO if you are uncertain whether an HLC review is required.

SUBMITTAL CHECKLIST:

STAFF:	APPLICANT:	
☐	☒	**Completed application**
		Please note: Any application that is missing information will be considered incomplete and cannot be accepted.
☐	☒	**Dimensioned and scaled building plans**
		Please note: For review purposes electronic submittal of plans in PDF format is preferred. If hard copies are submitted original plans should be no larger than 11" x 17" and be of a good, reproducible quality. Inaccurate or non-legible site plans can result in a delay with the application review.
		Must include the following documents:
		☒ Site plan (one for existing and one for proposed conditions. Must indicate all proposed site changes, such as additions, alterations, new construction or demolition)
		☒ Elevation plans (must specify all exterior changes and exterior building materials and finishes to be used, i.e., siding, roofing, windows, doors, fences, etc.)
		☒ Floor plans
		☒ Roof plan
☐	☒	**Material samples, specifications or manufacturer information**
☐	☒	**Color photographs of the structure and site**
		Please note: For review purposes electronic submittal of photos is preferred.
		Must include the following:
		☒ Overall elevation views
		☒ Close-ups of all affected areas being modified

The signature of owner authorizes City of New Braunfels staff to visit and inspect the property for which this application is being submitted. The signature also indicates that the applicant or their agent has reviewed the requirements of this application/checklist and all items on this checklist have been addressed and complied with.

Property Owner's Signature: _____ ***Date:*** 1 Feb 2021

Applicant Signature: Same as owner ***Date:*** _____

KEEP THIS SECTION FOR YOUR RECORDS

Submittal Process:

1. Complete the application for a Certificate of Alteration for a City Landmark or Local Historic District with all required information, plans, and photographs.
2. Submit all application materials to the HPO.
3. Preliminary Review by HPO.
    - Applicants may have their projects reviewed by the HPO prior to submitting for final review by the Historic Landmark Commission (HLC). The HPO provides informal review of projects, may suggest revisions to plans and specifications to meet standards, and makes recommendations to the HLC regarding applications.
4. Historic Landmark Commission Meetings.
    - The HLC generally meets on the second Tuesday of every month at 8:30 a.m., unless otherwise announced. Applicants or their agent are advised to attend the meeting to present information to the HLC and to answer any questions the HLC may have regarding the project. Failure to attend a HLC meeting may result in a postponement or denial of your application.
5. Reviewed plans.
    - Once reviewed by the HLC, the HPO will provide a signed Certificate of Approval to the applicant within 10 business days after the meeting, unless further information is required by the HLC for release of the permit. A copy of the signed Certificate of Approval should be submitted to the Building Division with the building permit application.

GENERAL DESIGN GUIDELINES USED FOR REVIEW OF CERTIFICATES OF APPROPRIATESS FOR CITY LANDMARKS

The following guidelines, based upon the Secretary of the Interior's Standards for the Rehabilitation of Historic Properties, are used to review projects in the Local Historic District and those that involve Local Historic Landmarks:

- Every reasonable effort shall be made to adapt the property in a manner which requires minimal alteration of the building, structure, object, or site and its environment.
- The distinguishing original qualities or character of a building, structure, object, or site and its environment shall not be destroyed when possible. The removal or alteration of any historic material or distinctive architectural features should be avoided when possible.
- All buildings, structures, objects, and sites shall be recognized as products of their own time. Alterations that have no historical basis and which seek to create an earlier appearance shall be discouraged.
- Changes which may have taken place in the course of time are evidence of the history and development of a building, structure, object, or site and its environment. These changes may have acquired significance in their own right, and this significance shall be recognized and respected.
- Distinctive stylistic features or examples of skilled craftsmanship which characterize a building, structure, object, or site shall be kept where possible.
- Deteriorated architectural features shall be repaired rather than replaced, wherever possible. In the event replacement is necessary, the new material shall reflect the material being replaced in composition, design, color, texture, and other visual qualities. Repair or replacement of missing architectural features should be based on accurate duplications of features, substantiated by historical, physical, or pictorial evidence rather than on conjectural designs or the availability of different architectural elements from other buildings or structures.
- The surface cleaning of structures shall be undertaken with the gentlest means possible. Sandblasting and other cleaning methods that will damage the historic building materials shall not be undertaken.
- Every reasonable effort shall be made to protect and preserve archeological resources affected by, or adjacent to, any project.
- Contemporary design for alterations and additions to existing properties shall not be discouraged when such alterations and additions do not destroy significant historical, architectural, or cultural material, and such design is compatible with the size, scale, color, material, and character of the property, neighborhood, or environment.

City of New Braunfels

PLANNING & DEVELOPMENT SERVICES

2020-2021 HISTORIC LANDMARK COMMISSION MEETING CALENDAR

MEETINGS ARE HELD VIA ZOOM UNTIL FURHTER NOTICE

Meeting Date (2ND TUESDAY OF EVERY MONTH AT 8:30 AM)	Application Deadline
Tuesday, November 10, 2020	Tuesday, November 3, 2020
Tuesday, December 8, 2020	Tuesday, December 1, 2020
Tuesday, January 12, 2021	Tuesday, January 5, 2021
Tuesday, February 9, 2021	Tuesday, February 2, 2021
Tuesday, March 9, 2021	Tuesday, March 2, 2021
Tuesday, April 13, 2021	Tuesday, April 6, 2021
Tuesday, May 11, 2021	Tuesday, May 4, 2021
Tuesday, June 8, 2021	Tuesday, June 1, 2021
Tuesday, July 13, 2021	Tuesday, July 6, 2021
Tuesday, August 10, 2021	Tuesday, August 3, 2021
Tuesday, September 14, 2021	Tuesday, September 7, 2021
Tuesday, October 12, 2021	Tuesday, October 5, 2021
Tuesday, November 9, 2021	Tuesday, November 2, 2021
Tuesday, December 14, 2021	Tuesday, December 7, 2021

RIGHT SIDE VIEW

REAR VIEW

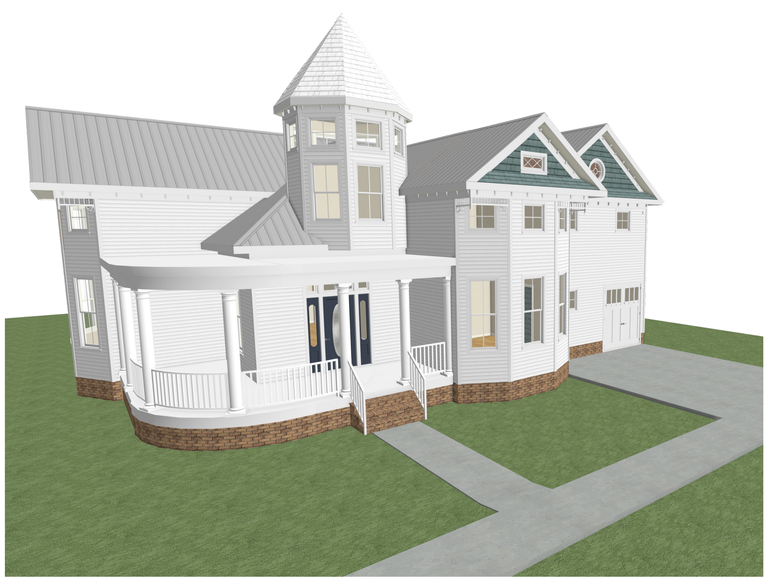

FRONT VIEW

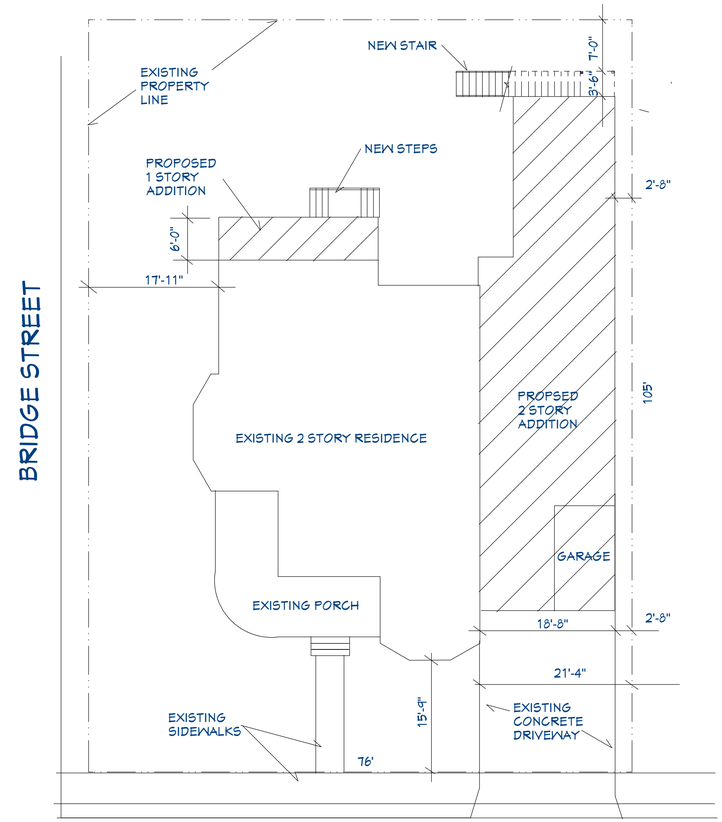

PROPOSED SITE PLAN

SCALE: 1" = 10'

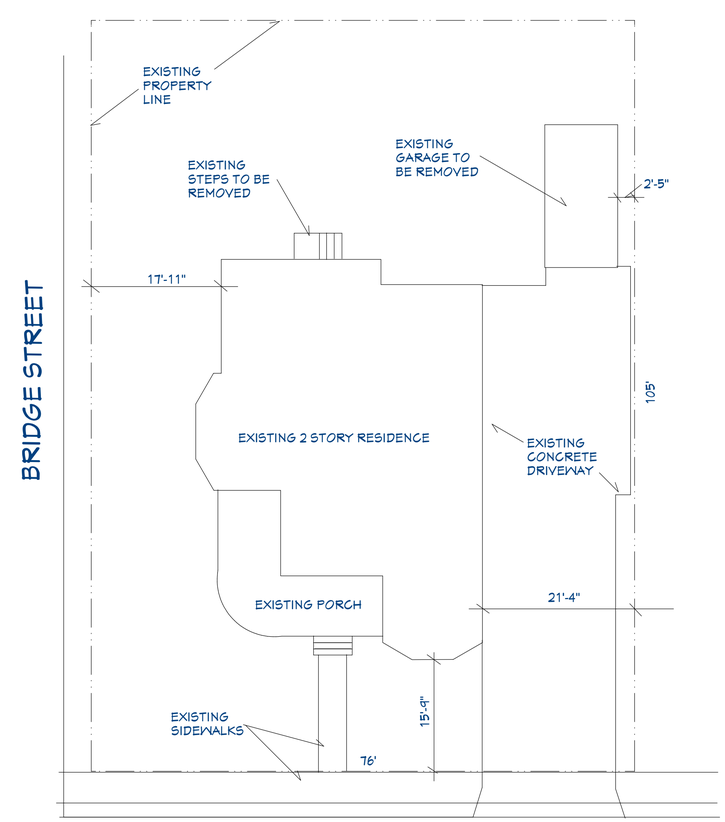

EXISTING SITE PLAN

SCALE: 1" = 10'

AREA CALCULATIONS

FIRST FLOOR A/C EXISTING	1503 S.F.
SECOND FLOOR A/C EXISTING	988 S.F
TOTAL EXISTING A/C AREA	2,491 S.F.
FIRST FLOOR A/C ADDITION	1,051 S.F.
SECOND FLOOR A/C ADDITION	1,270 S.F.
TOTAL NEW A/C AREA	2,321 S.F.
POOL HOUSE AREA	300 S.F.
GARAGE AREA	116 S.F.
TOTAL AREA	5,228 S.F.

ADDITIONS TO
WILLIAMS RESIDENCE

307 N. GUENTHER AVE.
NEW BRAUNFELS, TEXAS

REVISION TABLE			
NUMBER	DATE	REVISED BY	DESCRIPTION

ADDITIONS TO
WILLIAMS RESIDENCE

DRAWINGS PROVIDED BY:
RIVERSTONE DESIGNS INC.

DATE:
1/30/2021

SCALE:

SHEET:
1

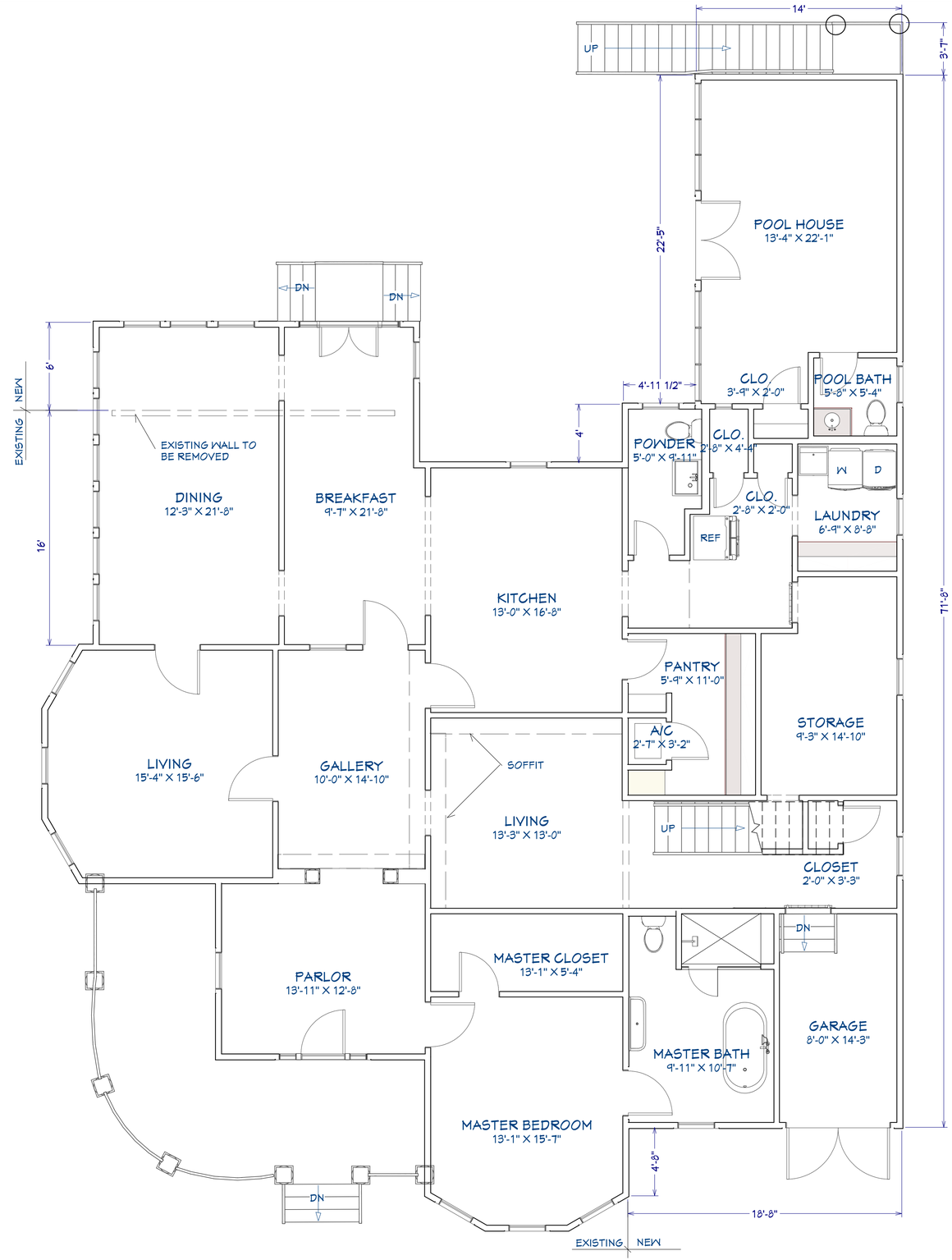

FIRST FLOOR PLAN

SCALE: 1/4" = 1'-0'

REVISION TABLE			
NUMBER	DATE	REVISED BY	DESCRIPTION

ADDITIONS TO
WILLIAMS RESIDENCE

DRAWINGS PROVIDED BY:
RIVERSTONE DESIGNS INC.

DATE:
1/30/2021

SCALE:

SHEET:
2

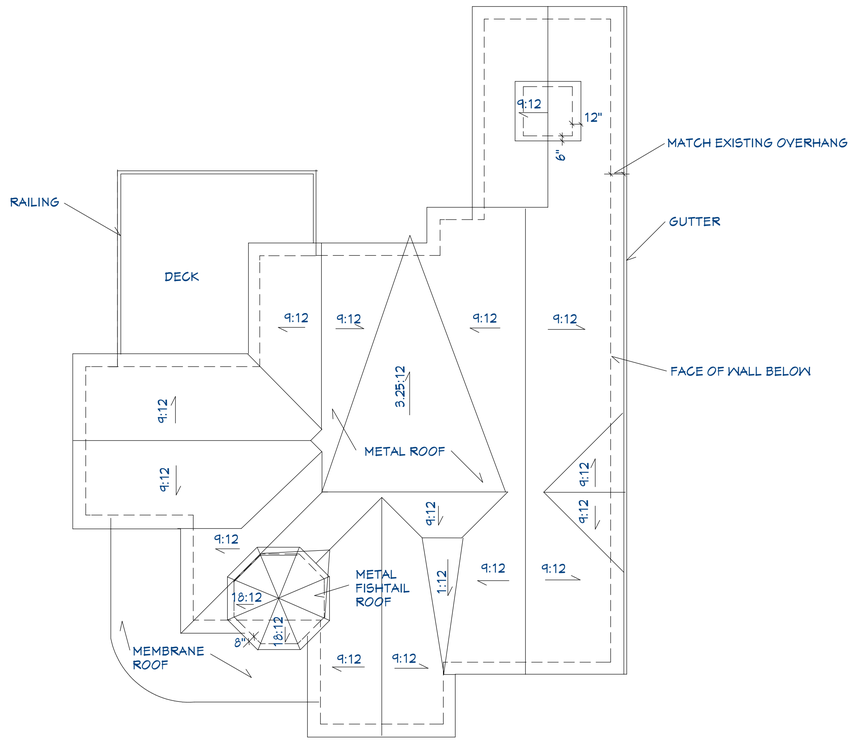

ROOF PLAN

SCALE: 1/8" = 1'-0'

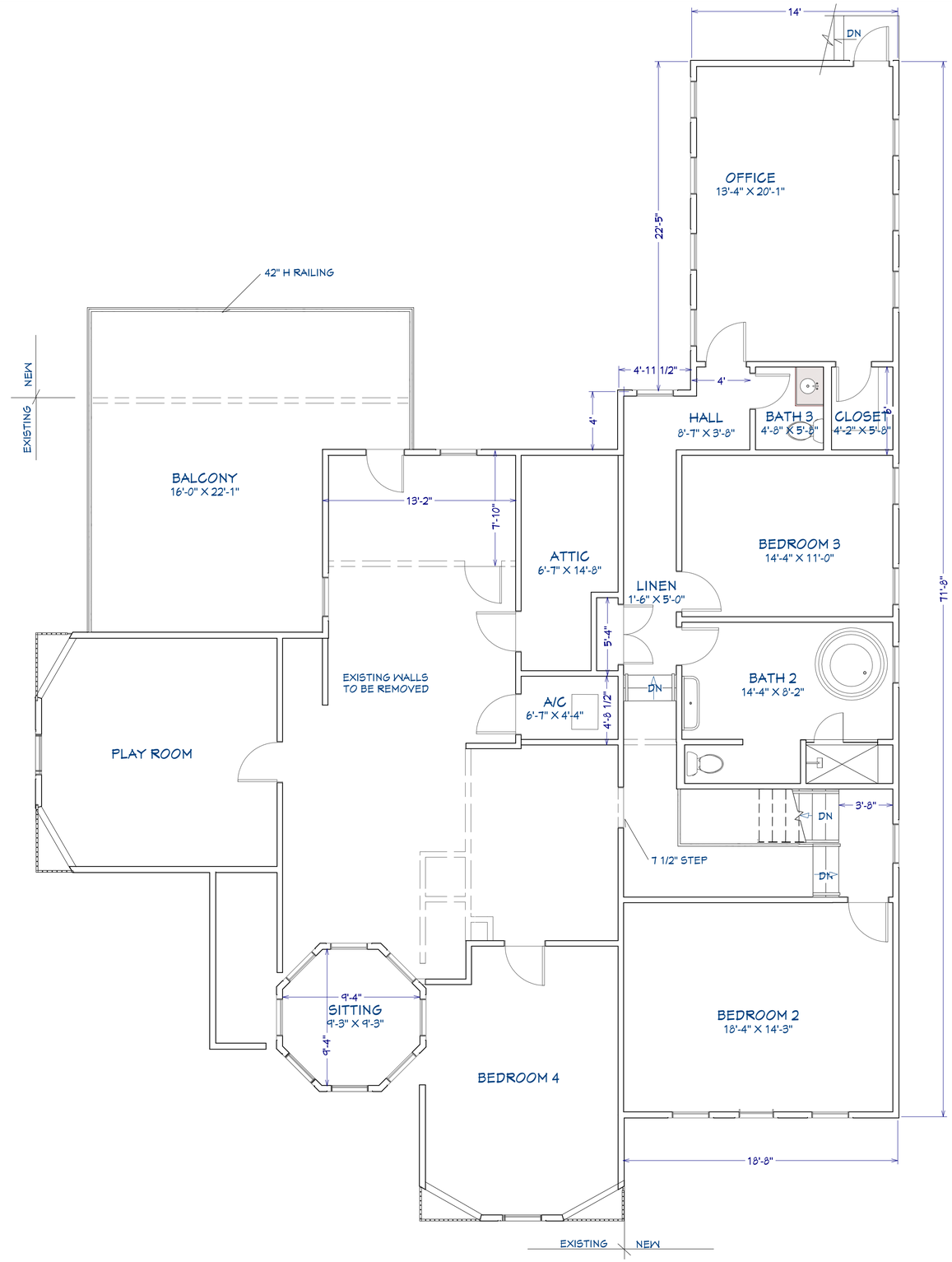

SECOND FLOOR PLAN

SCALE: 1/4" = 1'-0'

REVISION TABLE		
NUMBER	DATE	REVISED BY	DESCRIPTION

ADDITIONS TO WILLIAMS RESIDENCE

DRAWINGS PROVIDED BY:
RIVERSTONE DESIGNS INC.

DATE:
1/30/2021

SCALE:

SHEET:
3

LEFT SIDE ELEVATION

SCALE: 1/4" = 1'-0'

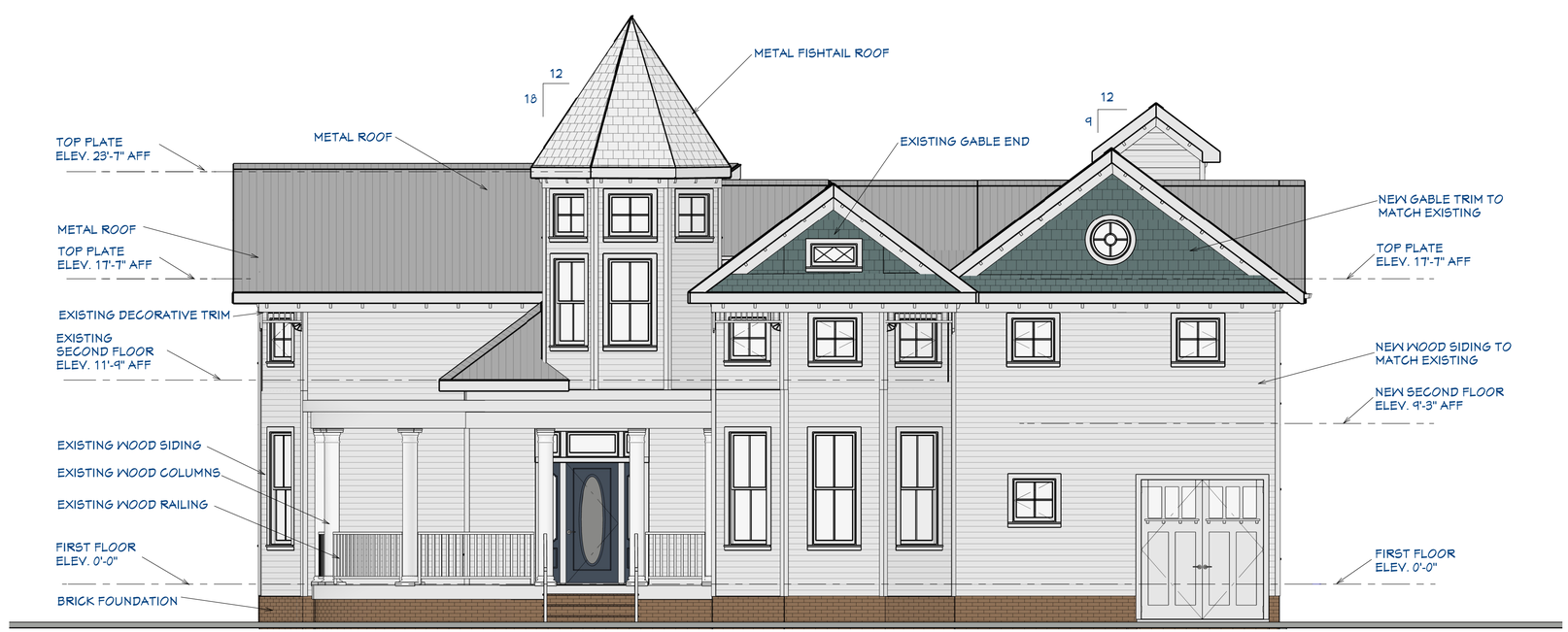

FRONT ELEVATION

SCALE: 1/4" = 1'-0'

REVISION TABLE		
NUMBER	DATE	REVISED BY	DESCRIPTION

ADDITIONS TO
WILLIAMS RESIDENCE

DRAWINGS PROVIDED BY:
RIVERSTONE DESIGNS INC.

DATE:
1/30/2021

SCALE:

SHEET:
4

RIGHT SIDE ELEVATION

SCALE: 1/4" = 1'-0'

REAR ELEVATION

SCALE: 1/4" = 1'-0'

REVISION TABLE

NUMBER	DATE	REVISED BY	DESCRIPTION

ADDITIONS TO
WILLIAMS RESIDENCE

DRAWINGS PROVIDED BY:
RIVERSTONE DESIGNS INC.

DATE:
1/30/2021

SCALE:

SHEET:
5

RIGHT SIDE VIEW

City of New Braunfels

PLANNING & DEVELOPMENT SERVICES

December 18, 2020

Gregory J. Williams
307 N. Guenther
New Braunfels, Texas 78130

RE: Case# Z-20-020
307 N. Guenther

On December 17, 2020 the Zoning Board of Adjustment **approved** your request to allow a proposed addition to a single-family home to 1. encroach up to 2.3 feet into the required 5-foot side setback and 2. encroach up to 13 feet into the required 20-foot rear setback, addressed at 307 N. Guenther.

You may now remove the notification signs from your property if you have not already done so.

A copy of this variance approval letter and updated building elevation/construction plans must be submitted to the City's Building Division to proceed toward approval of the building permit. Please include a copy of this letter with your application to facilitate approval.

Should you have questions, please call me at (830) 221-4056.

Sincerely,

Maddison O'Kelley
Planning Division

Historic Landmark Commission Agenda Item Report

2/9/2021

Agenda Item No.

Presenter/Contact
Caleb Gasparek, Historic Preservation Officer
CGasparek@nbtexas.org

SUBJECT:

Discuss the following items requested by the Historic Landmark Commission at the January 12, 2021 meeting:

- Renaming of Braddock Ave to Boenig-Maurer
- Property maintenance for Historic structures
- The creation of a design review subcommittee